COUNTY OF SAN MATEO
PLANNING AND BUILDING DEPARTMENT

DATE: April 6, 2023

TO: San Mateo County Zoning Hearing Officer

FROM: Planning Staff

SUBJECT: Consideration of a Coastal Development Permit (CDP), Use Permit, and Design Review Permit, pursuant to Sections 6328.4, 6267, and 6268, respectively, of the San Mateo County Zoning Ordinance, to establish an outdoor (cider) bar that includes a concession trailer, storage shed, portable outdoor patio structures (chairs, fire pit, tents), and a generator at upper Perched Beach located along Pillar Point Harbor Boulevard on San Mateo County Harbor District property. Minimal grading is proposed for ADA access improvements. In conjunction with the requested permits, it is recommended that the Zoning Hearing Officer determine that the project is categorically exempt from the California Environmental Quality Act (CEQA) pursuant to CEQA Guidelines Section 15303. The CDP is appealable to the California Coastal Commission.

County File Number: PLN 2022-00383 (Kasyan)

PROPOSAL

The applicant is seeking a Coastal Development Permit, Use Permit, and Design Review Permit to establish an outdoor (cider) bar at upper Perched Beach located along Pillar Point Harbor Boulevard on San Mateo County Harbor District property. The operation will include a 9-foot 4-inch-tall concession trailer (132 sq. ft.), a 6-foot 7-inch-tall storage shed (37 sq. ft.), a propane fire pit with 8 adirondack chairs and 4 three-seat swinging chairs, 4 fabric gazebo tent structures (128 sq. ft. each), and a 500-watt propane generator with a 500-gallon propane tank.

The approximately 4,600 sq. ft. project area will be laid with sporting turf or decomposed granite for surface stability and will be bordered by a simple 4-foot-tall wood post and nautical rope railing along three sides (north, east, west) of the project area and 8-foot-tall wood post with bamboo privacy screening connections along the south side of the project area. Parking will be accommodated in the existing Harbor District's parking lot located across Pillar Point Harbor Boulevard. A new water lateral would tap off of the Harbor District's existing water meter that is located at the corner of Pillar Point Harbor Boulevard and Johnson Pier Road within the District's property. The concession trailer has a 45-gallon internal grey water tank that would be emptied on a regular basis through a contracted grey water hauler. The Harbor District's existing restroom facility located at the end of Johnson Pier Road will be shared with the business.

The business operating hours would be: Wednesday - Friday from 3:00 p.m. to 8:00 p.m. and Saturday and Sunday from 12:00 p.m. to 8:00 p.m.; staff would arrive on-site to prepare for opening two hours in advance. One staff person is proposed with a maximum occupancy of 30 guests. In addition to serving cider, the operation will offer a limited snack menu (no onsite food preparation) consisting of items such as pre-made soft pretzels, smore's kits, and pre-packaged nuts and chips.

RECOMMENDATION

That the Zoning Hearing Officer approve the Coastal Development Permit, Use Permit, and Design Review Permit, County File Number PLN 2022-00383, by adopting the required findings and conditions of approval in Attachment A.

BACKGROUND

Report Prepared By: Summer Burlison, Senior Planner; sburlison@smcgov.org

Applicant: Meredith Kasyan, OceanCiders

Property Owner: San Mateo County Harbor District

Public Notification: : Ten (10) day advanced notification for the hearing was mailed to property owners within 300 feet of the project parcel and a notice for the hearing posted in a newspaper (San Mateo Times and Half Moon Bay Review) of general public circulation on March 25, 2023 and March 29, 2023, respectively.

Location: Upper Perched Beach, Pillar Point Harbor Boulevard, Pillar Point Harbor

APN: 047-083-060

Size: 11.68 acres (subject parcel only)

Existing Zoning: CCR/DR/CD (Coastside Commercial Recreation/Design Review/Coastal Development)

General Plan and Local Coastal Program Designation: Coastside Commercial Recreation

Sphere-of-Influence: Half Moon Bay

Existing Land Use: Harbor District, beach, kayak rental kiosk, parking

Water Supply: Coastside County Water District - water will be provided by a new water lateral connection from the Harbor District's existing water meter located at the corner of Pillar Point Harbor and Johnson Pier roadways within Harbor District property.

Sewage Disposal: N/A; grey water will be hauled offsite by a contracted hauler. The operation will be supported by existing harbor district restroom facilities located at the end of Johnson Pier roadway.

Flood Zone: Zone X (Area of Minimal Flood Hazard) per FEMA panel 06081C0138F, effective August 2, 2017.

Environmental Evaluation: This project is categorically exempt pursuant to CEQA Guidelines Section 15303, Class 3, for the new construction of small structures.

Setting: The project is proposed on the San Mateo County Harbor District's property at Pillar Point Harbor. The project site will be located on Upper Perched Beach which is an area west of Pillar Point Harbor Boulevard and southeast of an existing kayak rental stand along the Perched Beach shoreline. The project site is a relatively flat, disturbed and mostly denuded area "perched" above the natural shoreline approximately 3 feet (at its toe). The project site area is backed by an approximate 5 feet embankment with Pillar Point Harbor Boulevard above. The project site sits approximately 28 feet lower than Cabrillo Highway with a large paved public parking lot owned and managed by the Harbor District in between.

Chronology:

Date		Action
December 6, 2021	-	Applications for a Coastal Development Permit, Use Permit, and Off-street Parking Exception, PLN 2021-00470, received to establish the proposed project at 555 Obispo Road in El Granada (property owner: San Mateo County Harbor District).
July 6, 2022	-	Incomplete application due to Health regulations rendered the project location at 555 Obispo Road infeasible by the applicant; applicant decided to research alternative locations.
December 28, 2022	-	Subject applications for a Coastal Development Permit, Use Permit, and Design Review Permit, PLN 2022-00383, received for the subject location at Upper Perched Beach at Pillar Point Harbor.
March 20, 2023	-	Subject applications deemed complete.
April 6, 2023	-	Zoning Hearing Officer hearing.

DISCUSSION

A. KEY ISSUES

1. Conformance with the General Plan

Staff has determined that the project conforms with all applicable General Plan Policies, including:

a. Soil Resources

Policy 2.17 *(Regulate Development to Minimize Soil Erosion and Sedimentation)* seeks to regulate development to minimize soil erosion and sedimentation.

The project proposes minimal grading, approximately 15 cubic yards of cut and 15 cubic yards of fill, for minor ADA access improvements to the project site area. A condition of approval is included that will ensure soil erosion and sedimentation will be minimized during construction. The project site area is relatively flat, less than 1% slope (from northeast to southwest) and consists of disturbed and compacted fill material with low-lying vegetation along the seaward periphery of the project area. Existing periphery vegetation will be maintained and will help to minimize erosion and sedimentation from project implementation.

b. Visual Quality

Policy 4.15 (*Appearance of New Development*), Policy 4.17 *(Protections for Coastal Features)*, Policy 4.21 *(Utility Structures)*, Policy 4.22 (*Scenic Corridors*), and the *Urban Development Design Regulations* seek to regulate development to promote and enhance good design, site relationships and other aesthetic considerations; maintain and, where possible, improve upon the appearance and visual character of development in urban areas, including ensuring that new development is orderly and harmonious to the locality; and apply design review regulations where available.

The applicant proposes several simple “portable” structures, including a concession trailer, chairs, gazebo tents, post and rope fencing and utilities that can be easily removed with minimal adverse impacts to coastal resources. None of the proposed structures would exceed 14 ft. in height and the project intends to create an eclectic and intimate beachside setting for patrons. The project site area is located on Upper Perched Beach, nearest an existing kayak rental establishment,

and contributes to the simply constructed lower-intensity development along this stretch of shoreline.

c. Urban Land Use

Policy 8.16 (*Land Use Compatibility*), Policy 8.35 (*Zoning Regulations*), Policy 8.36 (*Uses*), and Policy 8.40 (*Parking Requirements*) seek to ensure that development is compatible with adjacent land uses and in compliance with zoning development standards; regulate minimum on-site parking requirements in order to accommodate the parking needs of the development and provide convenient and safe access.

The project involves establishing a lower-intensity commercial recreation use on Upper Perched Beach at Pillar Point Harbor. The project would be located approximately 100 feet southeast of the existing Half Moon Bay Kayak Rental establishment at Perched Beach. The project includes minor ADA access improvements to the proposed project area and use of up to 10 parking spaces within the existing Harbor District's public parking lot (directly across Pillar Point Harbor Boulevard). The project complies with applicable Coastside Commercial Recreation zoning standards, as discussed below in Section A.3.

d. Water Supply and Wastewater

Policy 10.10 *(Water Supplies in Urban Areas)* and Policy 11.5 *(Wastewater Management in Urban Areas)* encourage water systems and sewerage systems as the preferred methods of supply in urban areas.

The project proposes a water lateral extension from the Harbor District's existing water meter located at the corner of Pillar Point Harbor and Johnson Pier roadways within Harbor District property. Coastside County Water District has provided conditional approval of the water connection proposal. No sewage connection is proposed as the applicant will contract with a grey water hauler for regular grey water pick-up and offsite disposal. The property owner has provided authorized consent to allow the proposed operation to use the Harbor District's existing restroom facility located at the end of the Johnson Pier roadway. County Environmental Health Services has provided conditional approval of these elements of the project proposal.

e. Natural Hazards

Policy 15.12 *(Regulation of Development)* requires assessment of hazard risks such as flooding and sea level rise and expected exacerbation by climate change.

The Upper Perched Beach project area is approximately 3 feet higher (minimally) in elevation from the natural shoreline and was previously created by dredged fill from the harbor. According to the General Plan and Local Coastal Program Natural Hazards maps, the entire Pillar Point Harbor shoreline is within the tsunami inundation area. The project area, as with any shoreline, is also naturally subject to potential impacts from sea level rise (SLR) and coastal erosion, which would be exacerbated and accelerated by climate change. Our Coast Our Future hazard modeling of 3.3 feet of SLR with a 100-year storm, which is estimated in 2100 under a low risk aversion scenario (17% chance of exceeding and used for projects with a higher ability to adapt), demonstrates that the project site would not be impacted. Nonetheless, the project is designed to pose minimal impacts to the area and would be highly adaptive to coastal hazards as the project is limited to only structures that are easy to install and remove if threat from coastal hazards should exacerbate or accelerate.

f. Man-made Hazards

Policy 16.41 (*Regulate Land Uses to Assure Airport Safety)* seeks to regulate land uses surrounding airports to assure airport safety, including restriction on permitted land uses and height.

The project site area is within Half Moon Bay Airport Runway Safety Zone 7 (Airport Influence Area). The Half Moon Bay Airport Land Use Compatibility Plan prohibits hazards to flight and outdoor stadiums and similar uses with very high intensity uses and requires airspace review for objects over 100 feet in height. The proposed project does not involve a very high intensity use, as the project would have a maximum occupancy of 30 persons, plus 1 staff member. The project does not involve any uses that would be hazardous to flights and does not propose any objects close to 100 feet in height.

2. Conformance with the Local Coastal Program

Staff has determined that the project conforms with all applicable General Plan Policies, including:

a. Locating and Planning New Development

Policy 1.5 (*Land Uses and Development Densities in Urban Areas)* and Policy 1.19 *(Ensure Adequate Public Services and Infrastructure for New Development in Urban Areas)* permits land uses consistent with the Local Coastal Program (LCP) land use designations and seeks to ensure adequate water and wastewater supplies are available to serve the project.

The project proposes an outdoor (cider) bar, which is a consistent use with the property's LCP land use designation of Coastside Commercial Recreation. The project has been reviewed and conditionally approved for service by Coastside County Water District. Additionally, the project will not establish a sewer connection, and will instead contract with a hauler for grey water generated from the proposed operation as conditionally approved by the County's Environmental Health Services.

Policy 1.36 *(Half Moon Bay Airport Influence Area Requirements)* requires new development and land uses to comply with Federal Aviation Administration (FAA) standards and criteria for safety, flashing lights, reflective material, land uses which may attract large concentrations of birds, HVAC exhaust fans, and land uses which may generate communication interferences with aircraft.

The property is located within the Half Moon Bay Airport Influence Area and would not introduce any use or development that conflicts with aircraft safety, attracting large concentrations of birds, HVAC exhaust fans, or communication interferences for aircraft. Staff has included conditions of approval to prohibit flashing lights and highly reflective material, and to require lighting to be downward directed.

b. Sensitive Habitats

Policy 7.3 *(Protection of Sensitive Habitats)* prohibits any land use or development which would have significant adverse impact on sensitive habitat areas.

The project site is located in a previously disturbed area along the Pillar Point Harbor shoreline known as Upper Perched Beach. This upper benched area is mostly denuded fill material backed by an approximate 5-foot embankment vegetated with ice plant. The project site area was created by past harbor dredge fill with a toe to the lower shoreline of approximately 3 feet below. The project proposes low-impact development that is easily relocatable if necessary and would

not encroach upon any sensitive habitat area or cause significant adverse impact to any sensitive habitat area, including coastal waters.

c. Visual Resources

Policy 8.5 *(Location of Development)*, Policy 8.12 *(General Regulations)*, Policy 8.13 *(Special Design Guidelines for Coastal Communities)*, and Policy 8.32 *(Regulation of Scenic Corridors in Urban Areas)* seek to ensure development is least visible from State and County Scenic Roads, is least likely to significantly impact views from public viewpoints and is consistent with all other LCP requirements; apply Special Design Guidelines for Princeton-by-the Sea that encourages buildings to reflect the nautical character of the harbor setting; and apply Section 6565.17 *(Design Review Districts)* of the Zoning Regulations and the Community Design Manual for development in urban areas of the coastal zone. These design standards seek to limit grading to that necessary to implement the project, locate structures outside of flood zones and areas subject to inundation, protect views by the height and location, and design structures to be appropriate to the use of the property and in harmony with the adjacent community.

The project site is located in the Cabrillo Highway County Scenic Corridor. The site is located approximately 28 feet lower than Cabrillo Highway and all proposed structures are less than 14 feet (1/2 the elevation difference) in height. The structures would result in minor intermittent breaks in views of the ocean from Cabrillo Highway, but these intermittent breaks would be minimal given the specifications (size, height) of the proposed structures (chairs, canvas tents, concession trailer). Proposed grading is minimal to achieve ADA access compliance to the project site.

The project site area is located outside of a FEMA mapped flood hazard zone. The site's shoreline location makes it susceptible to sea level rise and erosion over time; however, the project proposes no shoreline protective devices and the entire development would be easily relocatable as threat arises from these coastal hazards. The proposed development is intended to generate an intimate and relaxing beachside concession stand environment to complement the natural surrounding setting.

d. Hazards

Policy 9.11 *(Shoreline Development)* and 9.13 *(Limiting Shoreline Structures on Sandy Beaches)* seek to locate new development in areas where beach erosion hazards are minimal, and no additional

shoreline protection is needed; avoids the need for future protective devices that impact sand movement and supply; and prohibits permanent structures on the dry sandy beach.

See staff's discussion in subsection c. above.

e. Shoreline Access

Policy 10.1 *(Permit Conditions for Shoreline Access)* and Policy 10.13 *(Commercial and Industrial Areas)* require some shoreline access provision as a condition of granting development permits for any public or private development between the sea and the nearest road, including for commercial and industrial development.

The project proposes ADA improvements to ensure accessibility from Johnson Pier roadway to the north. Additionally, the existing access pathway from Pillar Point Harbor Boulevard down the embankment to the project site area will be improved for ADA compliance. Both of these pathways will improve existing open access to the Perched Beach shoreline. Additionally, numerous other existing walkways and trails throughout the harbor provide access to the shoreline and the project would not impede or obstruct existing lateral or vertical shoreline access or existing trails throughout the harbor facilities.

3. Conformance with the Zoning Ordinance

The project conforms with the following applicable Zoning Regulations:

a. Permitted Uses

The project site is located within the Coastside Commercial Recreation (CCR) Zoning District, which allows commercial, and visitor-serving uses including, but not limited to, bars consisting of commercial establishments primarily engaged in the sale of alcoholic beverages to the general public for immediate consumption on the premises and which may offer food and entertainment on a limited basis, subject to the issuance of a use permit for which the applicant is seeking. The project will offer a variety of (alcoholic and non-alcoholic) hard ciders and limited snacks and pre-packaged foods (e.g., s'mores kits, soft pretzels, chips); no onsite preparation of food is proposed or allowed.

b. Development Standards

The CCR zoning development standards for coastal access and protection of coastal resources requires development to comply with the Shoreline Access Component, Sensitive Habitats Component and Visual Resources Component of the LCP. Additionally, projects must comply with development standards for height, setbacks, lot coverage, and parking.

The project complies with the Shoreline Access, Sensitive Habitats, and Visual Resources Components of the LCP as discussed in Section A.2 of this report.

Given the project's proposed components (i.e., tents, post and rope fencing, concession trailer, chairs, fire pit) and unique location within the Harbor District's 11.68-acre lot, the project would not result in any compliance issues relative to height, setbacks or lot coverage standards of the CCR Zoning District.

Pursuant to Chapter 3 (*Parking*) of the County Zoning Regulations, the proposed bar use would require 10 parking spaces for the proposed maximum capacity of 20 persons (1 space for each 3 seats). Parking for the proposed use will be accommodated within the Harbor District's existing parking lot area on the east side of Pillar Point Harbor Boulevard. This parking lot consists of 277 parking spaces in total, is open to the public free of charge or permit and would offer the closest onsite parking availability to the project site. According to historical permit records for Pillar Point Harbor (CDP 133-76), a total of 550 parking spaces are approved to the support the harbor. In total, between the 8 parking lots within the harbor properties, there are a combined total of 682 parking spaces that include permit parking, public parking and boat trailer parking. Therefore, staff believes adequate parking remains throughout the harbor lots.

c. Use Permit Findings

Pursuant to Section 6267 of the CCR zoning regulations, a Use Permit is required for the proposed use, subject to the following findings:

(1) *The design and operation of the proposed use will further the purpose of this [CCR] Chapter as stated in Section 6265 [Purpose].*

The purpose of the CCR Zoning District is to establish commercial areas which are primarily oriented towards meeting the service and recreational needs of Coastside visitors, boat

users and Coastside residents seeking recreation; are active and pedestrian-oriented; have an intimate, human scale; have a unified design theme appropriate to their location; provide public access to coastal areas; and protect coastal resources.

The project meets these objectives of the CCR Zoning District as it will establish a low-intensity, low-impact commercial use to serve visitors and residents. The project is designed to create an eclectic, intimate and quaint “living room” atmosphere by the use of simple structures located near the shoreline. The proposed structures will be easy to install and remove as necessary to avoid impacts on coastal resources. The project would include improved ADA accessibility to the area, thereby improving access to the shoreline. The proposed project would be complementary in style and feel to the nearby kayak rental stand located approximately 100 feet northwest of the project site, on Perched Beach.

(2) *The design and operation of the proposed use will conform with the development standards stated in Section 6269 [Development Standards].*

The project conforms to the applicable development standards in Section 6269 of the CCR Zoning District Regulations as discussed in Section A.3.b.

(3) *The establishment, maintenance and/or conducting of the use will not, under the circumstances of the particular case, result in a significant adverse impact to coastal resources, or be detrimental to the public welfare or injurious to property or improvements in said neighborhood*.

The project proposes a low-impact commercial recreation use that aligns with the objectives of the CCR Zoning District. The applicant has support by the property owner, the San Mateo County Harbor District, for the use and preliminary (conditional) approvals have been granted by the County’s Drainage Section, Environmental Health Services, and the Coastside Fire Protection District and Coastside County Water District. The proposed structures will be simple and easy to install and remove if necessary and would not pose any significant adverse impact to coastal resources, including views, hazards, sensitive habitats, or shoreline access. Subject to the recommended conditions of approval, the project is not expected to pose a detriment to the public welfare or cause injury to property or improvements in the area.

d. Design Review

Pursuant to Section 6268 (*Design Review*) of the CCR Zoning Regulations and provided the project parcel is located in a Design Review overlay, the project is subject to design review. Non-residential development is required to comply with the design guidelines and criteria of the Community Design Manual and the LCP's Visual Resources and Special Communities Component. See Section A.2.c. (*Visual Resources Component*) for discussion on the project's compliance with the applicable design review standards of the Community Design Manual and Visual Resources and Special Communities Component of the Local Coastal Program.

B. MIDCOAST COMMUNITY COUNCIL

Staff received a letter dated January 25, 2023 from the Midcoast Community Council (MCC) expressing support for the proposed project at Pillar Point Harbor, with recognition that it is an "ideal" locally-owned and low-impact business for the Coastside with the ADA improvements for the trail connecting to the coastal trail as additional public benefit.

Subsequently, on February 26, 2023, staff received correspondence from the MCC continuing to express support for the project with the following additional comments:

1. The use won't have any significant permanent infrastructure and would be totally portable; however, the presence of this project and the existing kayak rental facility along this stretch of beach should not be construed as allowing more substantial development on the property in the future.

   Staff Response: The subject project would not set any precedent for the establishment of any other proposed use along this, or any portion, of Harbor District property or the beach. Any modification to permitted uses or any new uses proposed in this area is subject to separate permits and review and would be required to conform with all applicable land use policies and regulations.

2. Part of the project involves substantial work on access to the site and adjoining trails, apparently at the expense of the applicant. Since these improvements would be ongoing benefit to the Harbor it is concerning that a potential tenant of a public property be held responsible for improving public infrastructure. Interests and obligations of all parties on this matter should be clarified.

   Staff Response: While the County has no authority over the particular party that provides the improvements necessary to permit a project, staff's

understanding is that the project applicant is working closely with the San Mateo County Harbor District on efforts to achieve conformance for the various aspects of the project, including ADA trail/access improvements. It is staff's understanding that the Harbor District will be providing the ADA improvements from the project site area up to Pillar Point Harbor Boulevard.

3. The service and storage of alcohol presents concern related to security of the non-hardened site during non-operating hours. It is noted there has been a proliferation of alcohol-related business at the Harbor and it may be worth a new look at preserving a balance aimed at family recreation and safe working harbor conditions.

   Staff Response: Staff has included a condition of approval requiring all unaffixed structures associated with the use to be disassembled at the end of each business day and stored in a secured, locked, location. Additionally, the operation requires licensing and compliance with California Department of Alcohol Beverage Control (ABC). The applicant is in the process of securing an ABC license for the proposed operation.

4. It is not clear whether the business should have a sewer connection, but sewer function is important, especially in regard to Harbor businesses, and we urge that the relationship of this project to the sewer system should be carefully considered before permitting.

   Staff Response: While the project plans include a sewer lateral connection to the Harbor District's sewage system (that is part of Granada Community Services District), conditional approval has been granted by the County's Environmental Health Services for grey water generated from the project to be stored and hauled off-site on a regular basis by an applicant-contracted grey water removal service. The operation proposes to use the existing restrooms owned and operated by the Harbor District (located at the end of Johnson Pier roadway) for restroom facilities. Therefore, the project will not connect to, or add demand on, the sanitary sewer system.

C. ENVIRONMENTAL REVIEW

This project is categorically exempt pursuant to California Environmental Quality Act (CEQA) Guidelines Section 15303, Class 3, for the new construction of small structures.

D. REVIEWING AGENCIES

County Building Inspection Section
County Drainage Section
County Department of Public Works
County Environmental Health Services
Coastside Fire Protection District
Coastside County Water District
California Coastal Commission

ATTACHMENTS

A. Recommended Findings and Conditions of Approval
B. Location Map
C. Project Narrative
D. Project Plans
E. Project Details
F. Property Owner Consent
G. Midcoast Community Council Letters

SSB:cmc – SSBHH0090_WCU.DOCX

Attachment A

County of San Mateo
Planning and Building Department

RECOMMENDED FINDINGS AND CONDITIONS OF APPROVAL

Permit or Project File Number: PLN 2022-00383 Hearing Date: April 6, 2023

Prepared By: Summer Burlison, Senior Planner For Adoption By: Zoning Hearing Officer

RECOMMENDED FINDINGS

Regarding the Environmental Review, Find:

1. That the project is categorically exempt pursuant to California Environmental Quality Act (CEQA) Guidelines Section 15303, Class 3, for the new construction of small structures.

Regarding the Coastal Development Permit, Find:

2. That the project, as described in the application and accompanying materials required by Section 6328.7 of the Zoning Regulations and as conditioned in accordance with Section 6328.14, conforms to the plans, policies, requirements, and standards of the San Mateo County Local Coastal Program (LCP), specifically in regard to the Locating and Planning New Development, Visual Resources, Sensitive Habitats, Hazards, and Shoreline Access Components of the LCP as discussed in the staff report dated April 6, 2023.

3. That the project is subject to, and complies with, public access and public recreation policies of Chapter 3 of the Coastal Act of 1976 (commencing with Section 30200 of the Public Resources Code) as project is located between the nearest public road and the sea. The project includes improving ADA accessibility to the project site from both nearby roadways, Johnson Pier and Pillar Point Harbor Boulevard, within Pillar Point Harbor property. The improved accessibility paths will improve existing open access to the Perched Beach shoreline. Additionally, the project will not impede or obstruct other existing shoreline access throughout harbor facilities.

4. That the project conforms to the specific findings required by the policies of the San Mateo County LCP with regard to Locating and Planning New Development Visual Resources, Sensitive Habitats, Hazards, and Shoreline Access as the project contributes to the objectives of the CCR Zoning District; will not result in impacts to sensitive habitats; involves structures that will not significantly impede

or obstruct public views and are easy to install and remove if necessary, including due to threat from coastal hazards; and improves accessibility to this segment of shoreline.

Regarding the Use Permit, Find:

5. That the design and operation of the proposed use will further the purpose of this [CCR] Chapter as stated in Section 6265 [Purpose] as the project will establish a low-intensity, low-impact commercial use to serve visitors and residents; the proposed structures will be easy to install and remove as necessary to avoid impacts on coastal resources; the project will include improved ADA accessibility to the area, thereby improving access to the shoreline; and the project will be complementary in style and feel to the nearby kayak rental stand located approximately 100 ft. northwest of the project site.

6. That the design and operation of the proposed use will conform with the development standards stated in Section 6269 [Development Standards] as discussed in Section A.2 of the staff report dated April 6, 2023 for Shoreline Access, Sensitive Habitats and Visual Resources. Additionally, the project will not result in any compliance issues relative to height, setbacks or lot coverage standards of the CCR Zoning District.

7. That the establishment, maintenance and/or conducting of the use will not, under the circumstances of the particular case, result in a significant adverse impact to coastal resources, or be detrimental to the public welfare or injurious to property or improvements in said neighborhood as the project has support by the property owner, the San Mateo County Harbor District, and preliminary (conditional) approvals have been granted by the County's Drainage Section, Environmental Health Services, and the Coastside Fire Protection District and Coastside County Water District; the proposed structures will be simple and easy to install and remove if necessary and will not pose any significant adverse impact to coastal resources, including views, hazards, sensitive habitats, or shoreline access.

Regarding the Design Review Permit, Find:

8. That the project complies with the design guidelines and criteria of the Community Design Manual and the LCP's Visual Resources and Special Communities Component, and Chapter 6268 (Design Review) of the County Zoning Regulations. The project will only result in minor intermittent breaks in views from Cabrillo Highway, grading is minimal, no shoreline protective devices are proposed, proposed development is designed to be easy to install and remove if necessary, and the project will complement the simply constructed lower-intensity development along this stretch of shoreline.

RECOMMENDED CONDITIONS OF APPROVAL

Current Planning Section

1. This approval applies only to the proposal, documents and plans described in this report and approved by the Zoning Hearing Officer on April 6, 2023. The Community Development Director may approve minor revisions or modifications to the project if they are consistent with the intent of, and in substantial conformance with, this approval.

2. The Coastal Development Permit, Use Permit, and Design Review Permit approvals shall be valid for five (5) years from the date of final approval in which time a building permit shall be issued, and a completed building inspection (to the satisfaction of the Building Inspector) shall have occurred within 180 days of its issuance. Any extension to these permits shall require submittal of a request for permit extension and payment of applicable extension fees, no less than sixty (60) days prior to expiration. An extension of these approvals will be considered upon written request and payment of the applicable fees sixty (60) days prior to the expiration of the approvals.

3. Any change in use or intensity not already approved may require an amendment to the Use Permit and Coastal Development Permit. This includes any changes resulting from compliance with other codes and standards in order to implement the approved project. Amendment to this Use Permit and Coastal Development permit requires an application for amendment, payment of applicable fees, and consideration at a public hearing.

4. No site disturbance or tenant improvement work shall occur until a valid building permit has been issued.

5. In no case shall the use entertain more than thirty (30) visitors, or the maximum allowed under the California Building and Fire Codes, whichever is less.

6. A limited food menu may be served as ancillary to the primary beverage service and shall not require on-site preparation. Authorized food items are limited to pre-packaged snack foods (e.g., nuts, chips), s'mores kits, pre-made hot pretzels. Any proposed food items shall be subject to review and approval by the Planning and Building Department and Environmental Health Services. No commercial kitchen is permitted.

7. Facility operating hours shall be weekdays from 3 pm to 9 pm and weekends (Saturday and Sunday) from 12:00 p.m. to 9 p.m. *This does not include staff time for preparation or clean-up.*

8. The applicant shall maintain a valid license from the State Alcohol Beverage Control (ABC) for the facility and shall provide a copy to the Planning Department prior to building inspection final and certificate of occupancy. If the license is ever revoked or suspended, the applicant shall notify the Planning Department within ten (10) days of any such revocation or suspension.

9. The applicant shall encourage visitors to carpool and/or use alternative modes of transportation to the project site.

10. Any proposed on-site signage shall be submitted to the Planning and Building Department for review and approval prior to installation and may require the need for a building permit; consent from the property owner shall be included.

11. All lighting must be designed and located to limit and confine direct rays to the project site area and prevent glare in the surrounding area. Any proposed exterior lighting shall be reviewed and approved by the Planning Division (including design manufacturer's "cut sheets") prior to the issuance of a building permit. Prior to Planning final of the building permit for this project, the applicant shall submit photos verifying the installation of any approved light fixtures. No flashing lights are allowed.

12. The applicant shall adhere to Best Management Practices for erosion and sediment control throughout the duration of project construction. Erosion control measure deficiencies, as they occur, shall be immediately corrected. The goal is to prevent sediment and other pollutants from leaving the project site and to protect all exposed earth surfaces from erosive forces. Said plan shall adhere to the San Mateo Countywide Stormwater Pollution Prevention Program "General Construction and Site Supervision Guidelines," including:

    a. Stabilizing any denuded areas and maintaining erosion control measures continuously between October 1 and April 30. Stabilizing shall include both proactive measures, such as the placement of coir netting, and passive measures, such as revegetating disturbed areas with plants propagated from seed collected in the immediate area.

    b. Storing, handling, and disposing of construction materials and wastes properly, so as to prevent their contact with water bodies.

    c. Controlling and preventing the discharge of all potential pollutants, including pavement cutting wastes, paints, concrete, petroleum products, chemicals, wash water or sediments, and non-stormwater discharges to storm drains and water bodies.

    d. Using sediment controls or filtration to remove sediment when dewatering the site and obtaining all necessary permits.

e. Delineating with field markers clearing limits, easements, setbacks, sensitive or critical areas, buffer zones, trees and drainage courses.

f. Protecting adjacent properties, buildings, and undisturbed areas from construction impacts using vegetative buffer strips, sediment barriers or filters, dikes, mulching, or other measures as appropriate.

g. Performing earth-moving or ground disturbing activities only during dry weather.

h. Avoiding use of pesticides and fertilizers to prevent polluted runoff.

i. Limiting construction access routes and stabilizing designated access points.

j. Avoiding tracking dirt or other materials off-site; cleaning off-site paved areas and sidewalks using dry sweeping methods.

k. The contractor shall train and provide instructions to all employees and subcontractors regarding the construction best management practices.

13. The applicant shall ensure that during construction, noise, light, dust, odor and other interference with persons and property outside of the defined project site area is minimized. No amplified music is allowed.

14. Noise sources associated with demolition, construction, repair, remodeling, or grading of any real property shall be limited to the hours from 7:00 a.m. to 6:00 p.m. weekdays and 9:00 a.m. to 5:00 p.m. Saturdays. Said activities are prohibited on Sundays, Thanksgiving and Christmas (San Mateo County Ordinance Code Section 4.88.360).

15. The approved use shall maintain compliance with the noise, odor, and vibration standards of the Coastside Commercial Recreation District.

16. No garbage bins or debris associated with the use shall be left unsecured outside of operating hours and the applicant shall be responsible for ensuring that all garbage, debris, litter and/or solid waste generated from the use is properly disposed of and picked up on a regular basis.

17. No highly reflective materials are allowed in association with the use.

18. A secondary container shall be provided for the propane tank, as allowable under California Building Code.

19. The applicant is responsible for daily tracking and monitoring of grey water generated by the permitted use and ensuring proper handling and removal is scheduled as necessary to avoid capacity issues. Grey water removal receipts and a log of performed removals shall be maintained and made available to the County for review upon request.

20. All unaffixed structures related to the use shall be disassembled at the end of each business day and stored in a secured, locked, location.

Environmental Health Services

21. The limited food service menu shall not include complex food preparation such as cooking from scratch or raw to cook. Pre-packaged, ready-to-eat foods are allowed. Potentially hazardous foods that have been prepared and packaged in an approved (offsite) commercial kitchen may be allowed.

22. Reusable utensils, glassware, and/or dishware must comply State health codes for cleaning, including the three-step method of wash, rinse and sanitize.

23. A potable water connection shall be of a Uniform Plumbing Code and National Sanitation Foundation type.

24. The project shall maintain a current standard operating procedures plan, emergency contact, scheduled frequency, and Best Management Practices to avoid stormwater issues with the County Planning and Building Department and County Environmental Health Services.

25. A Certified Unified Program Agencies (CUPA) permit for the propane tank may be required.

Building Inspection Section

26. A building permit shall be issued prior to the start of any work. The project shall comply with all applicable code standards for issuance of a building permit.

Coastside Fire Protection District

27. Address Numbers: Building identification shall be conspicuously posted and visible from the street. (TEMPORARY ADDRESS NUMBERS SHALL BE POSTED PRIOR TO COMBUSTIBLES BEING PLACED ON SITE). The letters/numerals for permanent address numbers shall be of 6-inch height with a minimum 1/2-inch stroke and of a color, which is contrasting with the background. Such letter/numerals shall be illuminated and facing the direction of access.

Distance from Road	Address No. Size
0-50 feet	6-inch
50-100 feet	8-inch
100-150 feet	10-inch
150 + feet	12-inch

with a corresponding increase in stroke width.

28. Address numbers and directional signs may be required at the entrance to the driveway/access road, road forks, and intersections. When located on the street the numbers shall be visible from each direction of travel. This remote signage shall consist of a 6-inch by 18-inch green reflective metal sign with 3-inch reflective Numbers/Letters similar to Hy-Ko 911 or equivalent.

29. “No Parking - Fire Lane” signs shall be provided on both sides of roads 20 to 26 feet wide and on one side of roads 26 to 32 feet wide. CFC D103.6.

30. Fire Hydrant: There is a hydrant within the required 500 feet, but it is a dry barrel hydrant or non-compliant hydrant. The applicant shall change it to the required (Clow 960) hydrant. As per 2019 CFC, Appendix B, the hydrant must produce a minimum fire flow of 500 gallons per minute at 20 pounds per square inch residual pressure for 2 hours. Contact the local water purveyor for water flow details.

31. Show location of fire hydrant on a site plan. A fire hydrant is required within 500 feet of the building and flow a minimum of 500 gpm at 20 psi. This information is to be verified by the water purveyor in a letter initiated by the applicant and sent to San Mateo County Fire/CAL Fire or Coastside Fire District. If there is not a hydrant within 500 feet with the required flow, one will have to be installed at the applicant’s expense.

32. Exit Doors: Exit doors shall be of the pivoted type or side hinged swinging type. Exit doors shall swing in the direction of exit when serving an occupant load of 50 or more.

33. Exit Door Hardware: Exit door(s) shall be operable from the inside without the use of a key, special knowledge or effort. Exception: Main exit doors may be equipped with a keyed-locking device if there is a readily visible sign on or adjacent to the door stating, “THIS DOOR TO REMAIN UNLOCKED WHENEVER THE BUILDING IS OCCUPIED”. The letters in the sign shall not be less than 1-inch in height.

34. Exit Illumination: Signs shall be internally or externally illuminated by two electric lamps or shall be of an approved self-luminous type. Power Supply: Current supply to one of the lamps for exit signs shall be provided by the premises wiring system. Power to the other lamp shall be from storage of batteries or an on-site generator set. Include exit illumination with electrical plans and submit to the San Mateo County Building Department for review and approval.

35. When exit signs are required by Section 1013.2 / 1013.7 of the CBC, additional approved low-level exit signs, which are internally or externally illuminated, photo luminescent or self-luminous, shall be provided in all interior rated exit corridors serving guest rooms of hotels in Group R, Division 1 Occupancies, and other occupancies as determined by the code.

36. Exit signs shall be internally illuminated with approved emergency lighting.

37. Occupancy Load Signs where required 2019 CFC Chapter 10.

38. Vegetation Management (LRA) – The Coastside Fire District Ordinance 2019-03, the 2019 California Fire Code 304.1.2:

    a. A fuel break of defensible space is required around the perimeter of all structures to a distance of not less than 30 feet and may be required to a distance of 100 feet or to the property line. This is neither a requirement nor an authorization for the removal of living trees.

    b. Trees located within the defensible space shall be pruned to remove dead and dying portions, and limbed up 6 feet above the ground. New trees planted in the defensible space shall be located no closer than 10 feet to adjacent trees when fully grown or at maturity.

    c. Remove that portion of any existing trees, which extends within 10 feet of the outlet of a chimney or stovepipe or is within 5 feet of any structure. Maintain any tree adjacent to or overhanging a building free of dead or dying wood.

39. Emergency Building Access: The proposed project will require the installation of "Knox Boxes". These emergency key boxes are required when access to or within a structure or an area is unduly difficult because of secured openings or where immediate access is necessary for life saving or fire-fighting purposes. The Chief will determine the location for the key box and provide an authorized order form. All security gate systems controlling vehicular access shall be equipped with a "Knox Box"; key operated emergency entry device. For application and instructions please email cfpdfiremarshal@fire.ca.gov if you need further assistance.

40. Fire Extinguishers: There must be at least one 2A10BC fire extinguisher for each 3,000 sq. ft., travel distance not to exceed 75 feet with at least one extinguisher per floor per Title 19, California Code of Regulations. Show location of extinguishers on plans.

41. The "mobile food" trailer shall comply with Section 319 of the 2019 CFC.

42. A separate permit is required for the generator.

43. A separate permit is required for the propane tank.

44. Identify on plans for building permit submittal what is to be kept in the shed.

Coastside County Water District (CCWD)

45. The new water lateral must be connected to the existing domestic water system. There shall be no connection to either of the two fire services.

46. Coastside County Water District shall review the details for the proposed connection to the concession trailer.

47. Coastside County Water District shall review any water demand for irrigation, if landscaping is proposed.

48. The applicant shall submit a water demand worksheet for new fixtures and water use efficiency checklist to CCWD for review and approval prior to issuance of the building permit.

SSB:cmc – SSBHH0090_WCU.DOCX

COUNTY OF SAN MATEO - PLANNING AND BUILDING DEPARTMENT

ATTACHMENT B

San Mateo County

PLN2022-00383 - OceanCiders at Pillar Point Harbor

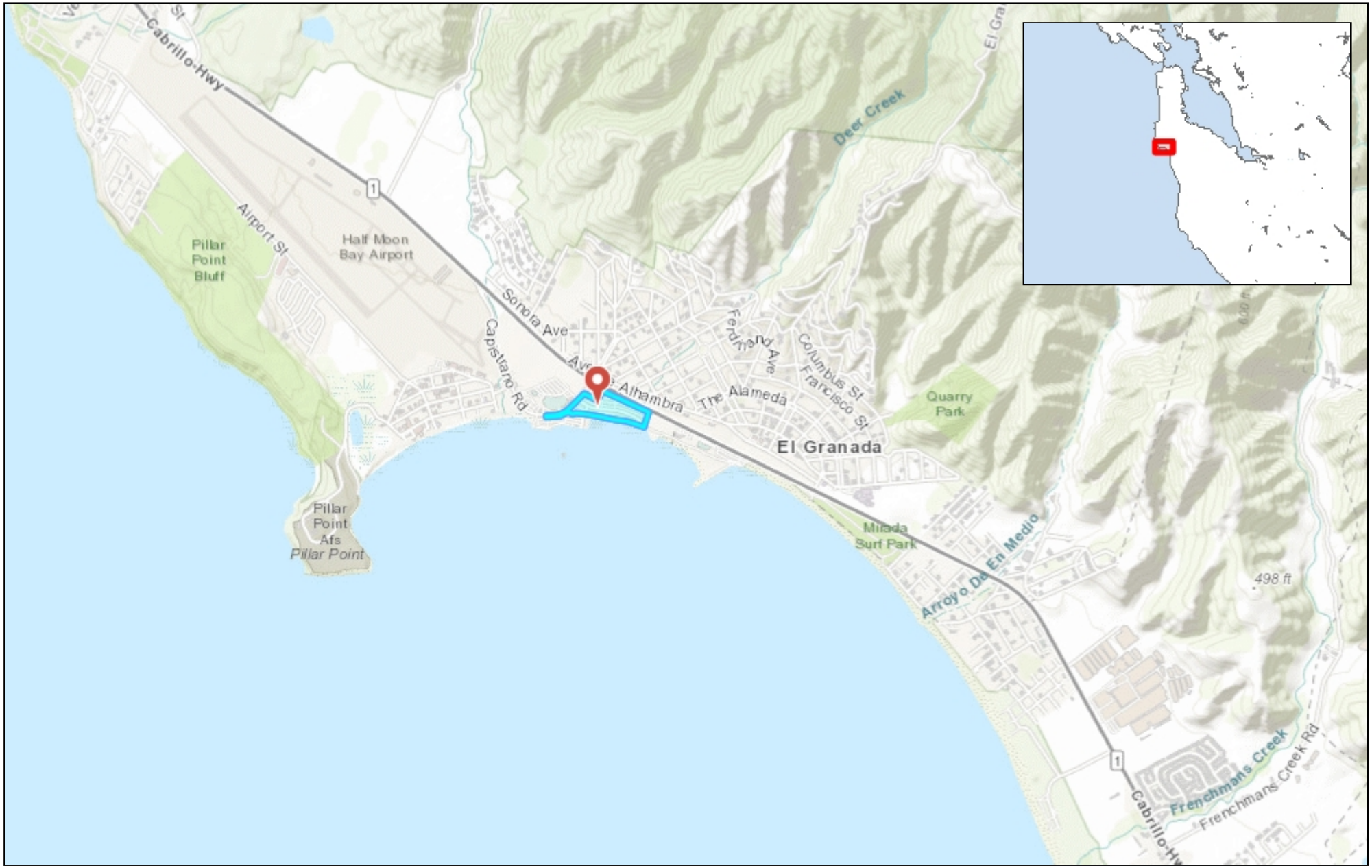

1.14 0 0.57 1.14 Miles

1: 36,112

WGS_1984_Web_Mercator_Auxiliary_Sphere

© Latitude Geographics Group Ltd.

This map is a user generated static output from an Internet mapping site and is for reference only. Data layers that appear on this map may or may not be accurate, current, or otherwise reliable.

THIS MAP IS NOT TO BE USED FOR NAVIGATION

COUNTY OF SAN MATEO - PLANNING AND BUILDING DEPARTMENT

ATTACHMENT C

OceanCiders

PO Box 852
Moss Beach, CA 94038
650-305-9454
info@OceanCiders.com

11/24/2022

OceanCiders is a unique adult beverage establishment in the Pillar Point Harbor area of Half Moon Bay, CA. While a number of local bars exist in the Harbor area, none are directly on the water-front, have unique comfortable seating, and none offer the kind of cozy customer-friendly atmosphere or variety of Hard Ciders with an ocean-view that ***OceanCiders*** does. Start-up date for the bar is expected for the Spring of 2023.

The primary goal of ***OceanCiders*** is to provide unique hard cider to the discerning palate and to help customers appreciate and enjoy cider to the fullest extent. A secondary goal is to make the bar a cherished outside hang-out spot for locals & tourists alike in the Half Moon Bay's Pillar Point Harbor.

We intend to offer a variety of ciders on tap including a rotation of craft ciders from local California cideries as well as ciders from orchards & cideries across the country. Along with both alcoholic and non-alcoholic ciders, ***OceanCiders*** will offer s'mores by the communal fire-pit, soft pretzels with a cider cheese dip, and several pre-packaged snack items for sale.

The bar is owned & operated by local independent entrepreneur Meredith Kasyan. Ms. Kasyan has 20 years' experience as the founder & manager of a small non-profit Bay Area Theatre Company. The founding of this organization included business plans, budgeting, accounting, marketing, as well as producing, directing, and performing in live theatre. In addition, she has completed a Bar Ownership Certification Course, as well as the TIPs Food Service certification. Additional Bar-tending assistance will be performed by Tim Kennedy, with over 20 years Bar-tending experience at The Old Spaghetti Factory, along with other establishments.

The bar can be operated with 1 staff member to serve the guests, as well as keeping the intimate seating area sterilized (occupancy 25). The owner-operator, Meredith Kasyan will be on-site for the daily inventory, maintenance, as well as the community relationship-building, A highly computerized, inventory tracking and the creation of a customer database will be simple and effective.

OceanCiders

PO Box 852
Moss Beach, CA 94038
650-305-9454
info@OceanCiders.com

10272022

RE: PLN2021-00470

1 Pillar Point Harbor Blvd., Half Moon Bay, CA 94010
APN#047-39-0020
Parcel size 2792.85 sf

Site consists predominantly of tamped-down sand & decomposed granite. Most of the living vegetation in the area consists of invasive ice-plant. Some of which will be removed for accessible pathways from the Coastal Trail down to the OceanCiders site.

There are existing pathways throughout the area due to the un-paved portion of the Coastal Trail, most of which will remain.

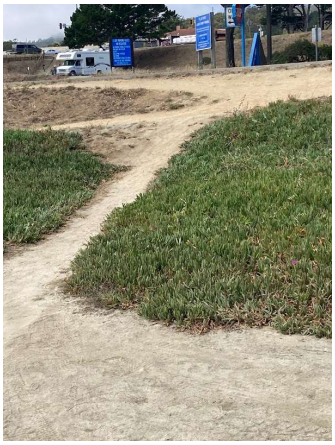

Closer to the water-front (adjacent to the OceanCiders site) is invasive Stinkwort, and Stinging Nettles that will not be disturbed

OceanCiders

Mailing Address: 2315 Carlos Ave. #852
Moss beach, CA 94038
650-305-9454

Site Location: 2 Pillar Point Harbor Blvd.
Half Moon Bay, CA 94019
Upper Perch Beach

Water tracking Process for OceanCiders Beach Bar/Trailer PLN:2021-00470

Operating Hours: Wednesdays – Fridays 3pm – 8pm, Saturdays & Sundays 12pm – 8pm

- Arrive on-site for Opening process 2 hours prior to opening.
- Check levels daily for potable water tank (30 gal.) & grey water tanks (internal tank 45 gal. & additional 42 gal. external tank) & log them.
- Closing Process – check levels for all 3 tanks (1 potable water & 2 grey water). If the internal 45 gallon Grey water tank is full & the 42 gal. external grey water tank reaches 50% full, business will shut down until the grey water is removed from accredited service vehicle.
    - A maximum amount of potable water to be used for daily operations will be 5 gallons. A signed application for a Commissary facility, Seville Tapas restaurant, 450 Capistrano Road, Half Moon Bay, CA 94019 (attached to this email to be submitted to Bernardo Patino, MFF Supervisor, EHS) where OceanCiders dirty glassware will be taken for cleaning.
    - Additional backstock of glassware will be utilized, to diminish the potable water on-site needs, & the infrequent Commissary visit needs, Per Greg Smith, SMC Land Use & Water Supervisor
- I have a contract agreement with American Portables, along with the Harbor District who also has a contract for regular servicing of the restrooms in the Pillar Point Harbor area. They will be removing my grey water from both tanks on a regular basis. Daily tracking will allow for additionally scheduled removal services if need be.
- Internal grey water tank's capacity is 45 gallons. The 2nd external tank of 42 gallons will be tracked to fill to a maximum of 20 gallons between Grey water removal services before business must cease and will not reopen until the next removal schedule has occurred.
- All scheduled Grey water removal receipts and logs will be available for review upon request.

Official Document Created by:

Meredith Kasyan
OceanCiders LLC
Owner/Operator

COUNTY OF SAN MATEO - PLANNING AND BUILDING DEPARTMENT

ATTACHMENT D

CODES AND SAFETY

1. ALL CONSTRUCTION AND INSTALLATION SHALL CONFORM TO THE FOLLOWING CODES:
2019 CALIFORNIA BUILDING CODE
2019 CALIFORNIA FIRE CODE
2019 CALIFORNIA ELECTRICAL CODE
2019 CALIFORNIA MECHANICAL CODE
2019 CALIFORNIA PLUMBING CODE
2019 CALIFORNIA ENERGY CODE
2019 CALIFORNIA EXISTING BUILDING CODE
2019 CALIFORNIA BUILDING STANDARDS CODE
2019 CALIFORNIA GREEN BUILDING STANDARDS CODE

TITLE 19 CALIFORNIA ADMINISTRATIVE CODE
TITLE 24 CALIFORNIA ADMINISTRATIVE CODE

AND ANY OTHER GOVERNING CODES, ORDINANCES AND ALL OTHER REGULATIONS OF LOCAL AGENCIES AND/OR OTHER GOVERNMENTAL AGENCIES HAVING JURISDICTION.

THE CONTRACTOR SHALL FURNISH ALL LABOR AND MATERIALS AS NECESSARY TO COMPLY WITH SUCH CODES AND REGULATIONS, WHETHER OR NOT SHOWN ON THE CONTRACT DOCUMENTS WITHOUT ANY ADDITIONAL CHARGE TO THE CONTRACT SUM.

IN THE EVENT OF CONFLICT, THE MOST STRINGENT REQUIREMENTS SHALL APPLY.

MECHANICAL, PLUMBING, ELECTRICAL, AND OTHER PENETRATIONS OF FLOORS, WALLS, AND CEILING SHALL BE SEALED AIRTIGHT WITH ACOUSTICAL SEALANT AND FIRESAFING AS REQUIRED.

PERMIT AND FEES

2. THE CONTRACTOR SHALL BE RESPONSIBLE FOR APPLYING AND OBTAINING ALL REQUIRED PERMIT AND INSPECTIONS TO CONFORM WITH BUILDING AND FIRE CODES.

THE CONTRACTOR SHALL PAY ALL FEES FOR THE BUILDING PERMIT (PLAN CHECKING FEE PAID BY OWNER) AS REQUIRED, PAY ALL UTILITY AND OTHER SERVICE FEES AS MAY BE REQUIRED AND SEND PROPER NOTICES, MAKE ALL NECESSARY ARRANGEMENTS AND PERFORM ALL OTHER SERVICES REQUIRED IN THE CARE AND MAINTENANCE OF ALL PUBLIC UTILITIES WHICH ARE WITHIN HIS INFLUENCE AND UNDER HIS DIRECTION. THE CONTRACTOR SHALL ASSUME ALL RESPONSIBILITY CONCERNING THE SAME FOR WHICH THE OWNER OR ARCHITECT MAY BE LIABLE. THE CONTRACTOR WILL FILE ALL NECESSARY DOCUMENTS WITH LOCAL AGENCIES AND THE STATE OF CALIFORNIA AS REQUIRED BY APPLICABLE REGULATIONS DURING AND UPON COMPLETION OF THE WORK.

EXAMINATION OF SITE

3. BEFORE SUBMITTING A BID, EACH BIDDER WILL CAREFULLY INSPECT THE SITE OF THE PROPOSED PROJECT TO ARRIVE AT THE CLEAR UNDERSTANDING OF THE CONDITION OF THE PREMISES, EXISTING OBSTRUCTIONS, THE ACTUAL ELEVATIONS AND ANY OTHER CONDITIONS AFFECTING THE PERFORMANCE OF HIS WORK BEFORE DELIVERY OF HIS PROPOSAL. NO EXTRA CONSIDERATION WILL BE GIVEN BY ANY REASON OF ERROR OR OVERSIGHT ON THE PART OF THE BIDDER.

DRAWINGS AND COORDINATION

4. THE INFORMATION GIVEN HERE IN AND SHOWN ON THE DRAWINGS IS ASSEMBLED FROM ALL OF THE DATA AVAILABLE TO THE ARCHITECT AT THE TIME OF DESIGN, BUT THE ACCURACY CANNOT BE GUARANTEED. THE DRAWINGS AND SPECIFICATIONS ARE ALSO INTENDED TO BE FOR ASSISTANCE AND GUIDANCE, BUT EXACT LOCATIONS, DISTANCES, LEVELS, ETC. SHALL BE GOVERNED BY ACTUAL CONDITIONS FOUND ON SITE AND MUST BE VERIFIED BY THE CONTRACTOR. DATA WILL BE TAKEN WITH THIS UNDERSTANDING.

THE CONTRACTOR SHALL BECOME FAMILIAR WITH THE ARCHITECTURAL, ELECTRICAL, PLUMBING, DETAILS, DRAWINGS AND SPECIFICATIONS AND PLAN THE WORK TO CONFORM WITH THE CONDITIONS SHOWN AND SPECIFIED, SO AS TO PROVIDE THE BEST ASSEMBLY POSSIBLE OF THE COMBINED WORK OF ALL TRADES.

THE CONTRACTOR SHALL BE RESPONSIBLE FOR COORDINATION BETWEEN ARCHITECTURAL, STRUCTURAL, MECHANICAL, PLUMBING, ELECTRICAL AND FIRE PROTECTION. THIS INCLUDES REVIEWING ALL REQUIREMENTS OF INDIVIDUAL SYSTEMS BEFORE ORDERING AND INSTALLATION OF ANY WORK. CONTRACTOR TO VERIFY ALL ARCHITECTURAL DETAILS AND ALL FINISH CONDITIONS (WHETHER DEPICTED ON DRAWINGS OR NOT) WITH SAME DISCIPLINES.

DETAILS SHOWN ARE TYPICAL, SIMILAR DETAILS APPLY IN SIMILAR CONDITIONS.

ANY ERRORS, OMISSIONS, OR CONFLICTS FOUND IN THE VARIOUS PARTS OF THE CONSTRUCTION DOCUMENTS SHALL BE BROUGHT TO THE ATTENTION OF THE ARCHITECT AND THE OWNER BEFORE PROCEEDING WITH THE WORK.

ANY DISCREPANCIES, OR WHERE A CONFLICT IN REQUIREMENTS OCCURS BETWEEN THE SPECIFICATIONS AND DRAWINGS, OR ON THE DRAWINGS, AND A RESOLUTION IS NOT OBTAINED FROM THE ARCHITECT BEFORE THE BIDDING DATE, THE MORE STRINGENT ALTERNATE WILL BECOME THE CONTRACTUAL REQUIREMENTS.

VERIFY CLEARANCES FOR FLUES, VENTS, CHASES, SOFFITS, FIXTURES, FIREPLACES, ETC. BEFORE ANY CONSTRUCTION, ORDERING OF, OR INSTALLATION OF ANY ITEM OF WORK.

DIMENSIONS

5. ALL CLEAR DIMENSIONS ARE TAKEN AND SHOWN TO FACE OF FINISH WALL, UNLESS OTHERWISE NOTED. ANY OTHER DIMENSIONS ARE TAKEN FROM FACE OF STUD, UNLESS OTHERWISE NOTED. DO NOT SCALE DRAWINGS, WRITTEN DIMENSIONS GOVERN. ANY AND ALL DIMENSIONAL DISCREPANCIES SHALL BE BROUGHT TO THE IMMEDIATE ATTENTION OF THE ARCHITECT.

THE CONTRACTOR SHALL REVIEW AND VERIFY ALL DIMENSIONS OF BUILDING AND SITE AND NOTIFY THE ARCHITECT OF ANY DISCREPANCIES BEFORE PROCEEDING WITH CONSTRUCTION.

WHEN SHOWN IN PLAN, ALL DIMENSIONS ARE TO FACE OF FINISH WALL, CENTERLINE OF ELEMENT INDICATED, OR CENTERLINE OF STUD WITHIN WALL ASSEMBLIES, UNLESS OTHERWISE NOTED.

WHEN SHOWN IN SECTION OR ELEVATION, ALL DIMENSIONS ARE TO FINISHED FACE UNLESS OTHERWISE NOTED.

WINDOW AND DOOR SIZES ON DRAWINGS ARE NOMINAL DIMENSIONS, REFER TO MANUFACTURER FOR ACTUAL ROUGH OPENING SIZES.

EXISTING CONDITIONS

6. THE CONTRACTOR SHALL VERIFY AND ASSUME RESPONSIBILITY FOR ALL DIMENSIONS AND SITE CONDITIONS. THE GENERAL CONTRACTOR SHALL INSPECT THE EXISTING PREMISES AND TAKE NOTE OF EXISTING CONDITIONS PRIOR TO SUBMITTING PRICES. NO CLAIM SHALL BE ALLOWED FOR DIFFICULTIES ENCOUNTERED WHICH COULD HAVE REASONABLY BEEN INFERRED FROM SUCH AN EXAMINATION.

THE CONTRACTOR SHALL VERIFY ALL EXISTING FIELD CONDITIONS AND DIMENSIONS PRIOR TO THE START OF THE WORK AND SHALL NOTIFY THE ARCHITECT OF ANY DISCREPANCIES BETWEEN THE DRAWINGS AND ACTUAL CONDITIONS.

THE CONTRACTOR SHALL VERIFY PROPER FUNCTIONING AND PERFORMANCE OF ANY EQUIPMENT, FIXTURES, FIREPLACES, VENTS, PLUMBING, FLUES, HEATING, ELECTRICAL PANELS/CIRCUITS, ETC. THAT ARE EXISTING TO REMAIN.

WORKMAN'S COMPENSATIONS

7. THE CONTRACTOR SHALL TAKE OUT THE PROPER WORKMAN'S COMPENSATIONS AND OTHER LIABILITY INSURANCES, INCLUDING COVERAGE FOR THE ARCHITECT AND ENGINEER OR ANY MEMBER OF THE STAFF MAKING SITE VISITS. THE CONTRACTOR SHALL ALSO TAKE OUT INSURANCE TO COVER FIRE, THEFT AND VANDALISM.

GUARANTEE

8. THE CONTRACTOR AND ALL SUBCONTRACTORS SHALL MAKE GOOD AT NO EXTRA COST TO THE OWNER ANY DEFECTS DUE TO THE FAULTY WORKMANSHIP OR MATERIALS INCLUDING SHRINKAGE, CRACKS OR SETTLEMENT INCORPORATED IN THE WORK WHICH MAY APPEAR DURING A PERIOD OF ONE (1) YEAR AFTER FILING THE 'NOTICE OF COMPLETION'.

INSTALL ALL FIXTURES, EQUIPMENT, AND MATERIALS PER MANUFACTURER'S RECOMMENDATIONS THE REQUIREMENTS OF THE CODES. ALL APPLIANCES, FIXTURES AND EQUIPMENT ASSOCIATED WITH PLUMBING, ELECTRICAL, AND MECHANICAL SYSTEMS SHALL BE LISTED BY A NATIONALLY RECOGNIZED AND APPROVED AGENCY.

CONSTRUCTION SUPERVISION

9. THE CONTRACTOR WILL GIVE THE WORK HIS PERSONAL SUPERVISION AND IN ADDITION HAVE A RESPONSIBLE FOREMAN AT THE JOB TO ACT FOR HIM. THE CONTRACTOR WILL BE RESPONSIBLE FOR THE COORDINATION OF THE WORK FOR ALL THE VARIOUS SUBCONTRACTORS. HE WILL SEE TO IT THAT NO WORK IS OMITTED AND THAT THE WORK OF ONE TRADE IS NOT DAMAGED BY THE WORK OF ANOTHER.

THE CONTRACTOR SHALL INSURE THE GUIDELINES SET FORTH ON THE CONSTRUCTION DRAWINGS AND SPECIFICATIONS ARE MAINTAINED DURING CONSTRUCTION INSTALLATION AND FINISHING OF ALL ASPECTS OF THIS PROJECT.

PROTECTION OF THE WORK

10. THE CONTRACTOR SHALL ADEQUATELY PROTECT THE WORK AND ADJACENT PROPERTY FROM DAMAGE. HE SHALL PROTECT ALL CORNERS, MILLWORK, EXTERIOR EDGES, ETC., BOTH INSIDE AND OUTSIDE THE BUILDING. IF DAMAGE OCCURS TO THE PROPERTY OR TO THE BUILDING DURING THE COURSE OF CONSTRUCTION, THE CONTRACTOR WILL MAKE ALL NECESSARY REPAIR TO THE SATISFACTION OF THE OWNER AND ARCHITECT.

THE CONTRACTOR SHALL INSURE THAT GUIDELINES SET FORTH ON THE CONSTRUCTION DRAWINGS AND SPECIFICATIONS ARE MAINTAINED DURING CONSTRUCTION INSTALLATION AND FINISHING OF ALL ASPECTS OF THIS PROJECT.

CARE AND CLEAN-UP

11. THE CONTRACTOR AND ALL SUBCONTRACTORS SHALL KEEP THE PREMISES CLEAN AT ALL TIMES DURING THE CONSTRUCTION. ON COMPLETION OF THE JOB, THE CONTRACTOR SHALL REMOVE ALL DEBRIS FROM THE BUILDING SITE. CLEAN ALL WINDOWS AND FLOORS AND LEAVE THE BUILDING BROOM CLEANED.

CHANGES

12. NO CHANGES SHALL BE MADE IN EITHER THE PLANS OR SPECIFICATIONS WITHOUT THE APPROVAL OF THE ARCHITECT. CHANGE ORDERS SHALL BE ISSUED BY THE ARCHITECT TO THE CONTRACTOR. WHEN A CHANGE IN COST IS INVOLVED, WRITTEN APPROVAL BY THE OWNER ON THE CHANGE ORDER IS REQUIRED BEFORE THE WORK SHALL PROCEED.

THE CONTRACTOR SHALL MAINTAIN ON THE JOB A FILE OF ALL APPROVED CHANGE ORDERS.

DRAWINGS AND SPECIFICATIONS COPYRIGHT

13. ALL DRAWINGS AND WRITTEN MATERIALS APPEARING HEREIN AND AS A PART OF THE CONTRACT DOCUMENTS SHALL CONSTITUTE THE UNPUBLISHED WORK OF THE ARCHITECT AND THE SAME MAY NOT BE DUPLICATED WITHOUT THE WRITTEN CONSENT OF THE ARCHITECT.

SEPARATE CONTRACTS

14. THE CONTRACTOR IS RESPONSIBLE FOR COORDINATION OF THE ENTIRE PROJECT AS SHOWN ON THESE PLANS, AND SHALL INSTALL AND PROVIDE NECESSARY EQUIPMENT FOR A COMPLETE AND OPERABLE SYSTEM.

GENERAL NOTES | S

A.B.	ANCHOR BOLT	DR	DOOR
A/C	AIR CONDITIONING	DWG	DRAWING
A.C.T.	ACOUST. CLG. TILE	D.S.	DOWN SPOUT
ADD	ADDENDUM	DW	DISHWASHER
ADDN	ADDITION	DWR	DRAWER
ADDNL	ADDITIONAL		
ADJ	ADJACENT, ADJUSTABLE	E	EAST
AFF	ABOVE FINISH FLOOR	(E)	EXISTING
AGGR	AGGREGATE	E.C.	END CAP
ALT	ALTERNATE	EF	EXHAUST FAN
ALUM	ALUMINUM	E.G.	EXHAUST GRILLE
ANOD	ANODIZED	ELEV	ELEVATION
APPD	APPROVED	ELEC	ELECTRIC, ELECTRICAL
APPROX	APPROXIMATE	EMERG	EMERGENCY
ARCH	ARCHITECT, ARCHITECTURAL	ENCL	ENCLOSURE
ATTACH	ATTACHMENT	ENGR	ENGINEER
AUTO	AUTOMATIC	E.P.	ELECTRICAL PANEL
AVG	AVERAGE	EQ	EQUIVALENT
		EQUIP	EQUIPMENT
B/B	BACK TO BACK	E.S.R.	ELASTIC SHEET ROOFING
BD	BOARD	EST	ESTIMATE
BTW	BETWEEN	E.W.	EACH WAY
BEV	BEVEL, BEVELED	EWC	ELECTRICAL WATER COOLER
BEJ	BRICK EXPANSION JOINT	EXC	EXCAVATED
B.F.	BARRIER FREE	EXH	EXHAUST
BIT	BITUMINOUS	EXP	EXPANSION, EXPANDED
BL.	BUILDING LINE	EXP.B.	EXPANSION BOLT
BLDG.	BUILDING	EXT	EXTERIOR
BLK	BLOCK		
BLKG	BLOCKING	F.A.	FIRE ALARM
BM	BEAM	FAB	FABRICATE
B.M.	BENCH MARK	FAS	FASTENER
BOTT	BOTTOM	F.C.U.	FAN COOL UNIT
BRK	BRICK	F.D.	FLOOR DRAIN
BRNZ	BRONZE	F.E.	FIRE EXTINGUISHER
BSMT	BASEMENT	F.E.C.	FIRE EXTINGUISHER CABINET
BU.	BUILT-UP	F.F.	FINISH FLOOR
BULL	BULLETIN	F/F	FACE TO FACE
BUR.	BUILT-UP ROOFING	F.H.	FIRE HYDRANT
		FHCAB.	FIRE HOSE CABINET
CAB	CABINET	FIN	FINISH, FINISHED
C.B.	CHALK BOARD	FIXT	FIXTURE
CC.	CENTER TO CENTER	FLR	FLOOR
C.C.T.	CUBICAL CURTAIN RACK	FLUOR	FLUORESCENT
CEM	CEMENT	FND.	FOUNDATION
CERT.	CERAMIC TILE	FT	FEET, FOOT
C.P.	CEMENT PLASTER	F.T.R.	FIN TUBE RADIATOR
C.G.	CORNER GUARD	FURN	FURNISH, FURNISHED
CHAM	CHAMFER	FURR	FURRED, FURRING
CHKD.PL.	CHECKERED PLATE		
C.I.	CAST IRON	G	GAS
C.J.	CONTROL JOINT	GA	GAUGE
CL.	CLOSET	GALV	GALVANIZED
CLG.	CEILING	G.B.	GRAB BAR
CLR	CLEAR	G.C.	GENERAL CONTRACTOR
CMU	CONCRETE MASONRY UNIT	GEN	GENERAL
CNTR	COUNTER	GL	GLASS
C.O.	CLEAN OUT	GND	GROUND
COL	COLUMN	GYP BD	GYPSUM WALLBOARD
CONC	CONCRETE		
CONF	CONFERENCE	H.B.	HOSE BIBB
CONN	CONNECT, CONNECTION	H.C.	HOLLOW CORE
CONT	CONTINUOUS	HDWD	HARDWOOD
CONTR	CONTRACTOR	HDWE	HARDWARE
CONV	CONVEYOR	HM	HOLLOW METAL
CORR	CORRIDOR	HT	HEIGHT
CPET	CARPET	HORIZ	HORIZONTAL
CSWRK	CASEWORK	HOSP	HOSPITAL
C.U.H.	CABINET UNIT HEATER	H.P.	HIGH POINT
		H.R.	HAND RAIL
DBL	DOUBLE	HTG	HEATING
DEG	DEGREE	HTR	HEATER
DEPRR	DEPRESSED	H+V	HEATING + VENTILATION
DES	DESIGN	HVAC	HEATING VENTILATION/ AIR CONDITIONING
DTL	DETAIL		
D.F.	DRINKING FOUNTAIN	H.V.C.	HOSE VALVE CABINET
DIA	DIAMETER	HW	HOT WATER HEATER
DIAG	DIAGONAL		
DIFF	DIFFUSER		
DIM	DIMENSION		
D.O.	DOOR OPENING		

I.D.	INSIDE DIAMETER	PAT	PATIENT
I.E.	INVERT ELEVATION	P.B.	PUSH BUTTON
I.F.	INSIDE FACE	P.B.D.	PARTICLE BOARD
IBC	INSTALLED BY CONTRACTOR	PC	PRECAST
IN	INCH, INCHES	PERIM	PERIMETER
INFO	INFORMATION	PERM	PERMANENT
INSUL	INSULATE, INSULATION	PKG	PARKING
INT	INTERIOR	PL	PLATE
ISA	INTERNATIONAL SYMBOL OF ACCESSIBILITY	PLAM	PLASTIC LAMINATE
		PLAS	PLASTER
J.C.	JANITOR CLOSET	PLBG	PLUMBING
JCT	JUNCTION	PLYWD	PLYWOOD
JT	JOINT	PNL	PANEL
		PR	PAIR
		PREFAB	PREFABRICATED
K.P.	KICK PLATE	PRTN	PARTITION
K.O.P.	KNOCK OUT PANEL	PSF	POUNDS PER SQUARE FOOT
		PSI	POUNDS PER SQUARE INCH
LAB	LABORATORY	PT	POINT
LAM	LAMINATE	PTD	PAINTED
LAV	LAVATORY	P.T.D.	PAPER TOWEL DISPENSER
LBS	POUNDS	P.T.R.	PAPER TOWEL RECEPTACLE
L.D.	LINEAR DIFFUSER	PVC	POLYVINYLCLORIDE
LDG	LANDING	PVMT	PAVEMENT
LDRY	LAUNDRY		
LEV	LEVEL	QT	QUARRY TILE
L.F.	LINEAR FOOT, FEET	QTY	QUANTITY
LG	LONG		
LGTH	LENGTH	R.A.	RETURN AIR
L.H.	LEFT HAND	RAD	RADIUS
L.L.H.	LONG LEG HORIZONTAL	RD	ROAD
L.L.V.	LONG LEG VERTICAL	RD.	ROOF DRAIN
LOC	LOCATION	REC	RECESS
L.O.	LOUVERED OPENING	RECPT	RECEPTACLE
L.P.	LIGHTING PANEL, LOW POINT	RECV	RECEIVE, RECEIVING
LT	LIGHT	REFL	REFLECTED, REFLECTIVE
LTG	LIGHTING	REFR	REFRIGERATOR
LTWT	LIGHTWEIGHT	REG	REGISTER
		REINF	REINFORCE, REINFORCING
MAINT	MAINTENANCE	REM	REMOVABLE
MAR	MARBLE	REP	REPAIR
MAS	MASONRY	REQD	REQUIRED
MATL	MATERIAL	RESIL	RESILIENT
MAX	MAXIMUM	RET	RETURN
MB.	MARKER BOARD	RFG	ROOFING
M.C.S.	METAL CARPET STRIP	REV	REVISED/REVISION
MECH	MECHANICAL	RM	ROOM
MEMB	MEMBRANE	R.O.	ROUGH OPENING
MTL	METAL, METALLIC	ROW	RIGHT OF WAY
MEZZ	MEZZANINE	RR.	RAILROAD
MFR	MANUFACTURER	R.S.	ROOF SUMP
MH	MANHOLE	RT	RESILIENT TILE
MIN	MINIMUM	R.T.U.	ROOF TOP UNIT
MIR	MIRROR	RWC	RAIN WATER CONDUCTOR
MISC	MISCELLANEOUS	RWL	RAIN WATER LEADER
MLDG.	MOULDING		
M.O.	MASONRY OPENING	SBO	SELECTED BY OWNER
MSC	MISCELLANEOUS STEEL CONTRACTOR	S	SOUTH
MTD	MOUNTED	SA	SUPPLY AIR
MULL	MULLION	SC	SOLID CORE
		SCHED	SCHEDULE
N	NORTH	SD	SOAP DISPENSER
(N)	NEW	SECT	SECTION
NAT	NATURAL	SF	SQUARE FOOT, FEET
N.I.C.	NOT IN CONTRACT	SHT	SHEET
NO	NUMBER	SHTG	SHEATHING
NOM	NOMINAL	SHR	SHOWER
N.T.S.	NOT TO SCALE	SIM	SIMILAR
		S.N.D.	SANITARY NAPKIN DISPENSER
O.C.	ON CENTER	SND/SP.	SANITARY NAPKIN DISPOSAL
O.D.	OUTSIDE DIAMETER	SPEC	SPECIFICATIONS
O/	OVER	SPKLR	SPRINKLER
OFF	OFFICE	SPKR	SPEAKER
OFRD	OVERFLOW ROOF DRAIN	SQ	SQUARE
O/H	OVERHEAD	S.S.	SANITARY SEWER
OPG	OPENING	SSD	SEE STRUCTURAL DRAWINGS
OPP	OPPOSITE	STAG	STAGGERED
OPP. HD.	OPPOSITE HAND	STD	STANDARD
ORN	ORNAMENTAL	STL	STEEL
OXY	OXYGEN	STOR	STORAGE

STRUCT	STRUCTURAL		
ST. STL.	STAINLESS STEEL		
SURF	SURFACE, SURFACING		
SUSP	SUSPEND, SUSPENSION		
SW	SWITCH		
SYS	SYSTEM		
		T	TREAD
TACK BD.	TACKBOARD		
T/B	TOP + BOTTOM		
T/C	TOP OF COVER OR CURB		
T.E.	TOP ELEVATION		
TEL	TELEPHONE		
TEMP	TEMPORARY		
TEMP GL	TEMPERED GLASS		
TERR	TERRAZZO		
T&G	TONGUE + GROOVE		
TR&R	SPLASH + RECYCLING		
THK	THICK, THICKNESS		
THRESH	THRESHOLD		
T.L.T.	TOILET		
T.O.	TOP OF		
T.O.C.	TOP OF CONCRETE		
T.O.F.	TOP OF FOOTING		
T.O.M.	TOP OF MASONRY		
T.O.P.	TOP OF PAVEMENT		
T.O.S.	TOP OF STEEL		
T.O.W.	TOP OF WALL		
T.P.D.	TOILET PAPER DISPENSER		
T.P.H.	TOILET PAPER HOLDER		
T.P.Z.	TREE PROTECTION ZONE		
TV	TELEVISION		
TVM	TELEVISION MONITOR		
TYP	TYPICAL		
TWH	TANKLESS WATER HEATER		
		U.H.	UNIT HEATER
		UL	UNDERWRITER'S LABORATORIES
		U.O.N.	UNLESS OTHERWISE NOTED
		V.BARR	VAPOR BARRIER
		VENT	VENTILATE, VENTILATION
		VERT	VERTICAL/VERTICALLY
		VEST	VESTIBULE
		V.I.F.	VERIFY IN FIELD
		V.R.S.	VINYL REDUCER STRIP
		V.C.T.	VINYL COMPOSITION TILE
		V.T.R.	VENT THROUGH ROOF
		V.W.C.	VINYL WALL COVERING
		W	WEST
		W/	WITH
		W/INS	WAINSCOT
		W.C.	WATERCLOSET
		WD	WOOD
		WGL	WIRE GLASS
		WH	WATER HEATER
		W.O.	WINDOW OPENING
		W/O	WITHOUT
		WP	WATERPROOF
		W.I.C.	WALK-IN-CLOSET
		WN	WINDOW
		W.M.	WIRE MESH
		WOM	WOMEN
		W.W.F.	WELDED WIRE FABRIC

ABBREVIATIONS | G

AERIAL MAP | J

CONSTRUCTION BMPS.

PROJECT MUST INCORPORATE ALL OF THE FOLLOWING BMPS. ADDITIONALLY, REFER TO STOPPP'S CONSTRUCTION BMP PAGE IN THIS SET.

1. STORE, HANDLE, AND DISPOSE OF CONSTRUCTION MATERIALS AND WASTES PROPERLY, SO AS TO PREVENT THEIR CONTACT WITH STORMWATER.

2. CONTROL AND PREVENT THE DISCHARGE OF ALL POTENTIAL POLLUTANTS, INCLUDING PAVEMENT CUTTING WASTES, PAINTS, CONCRETE, PETROLEUM PRODUCTS, CHEMICALS, WASHWATER OR SEDIMENTS, AND NON-STORMWATER DISCHARGES TO STORM DRAINS AND WATERCOURSES.

3. USE SEDIMENT CONTROLS OR FILTRATION TO REMOVE SEDIMENT WHEN DEWATERING SITE AND OBTAIN ALL NECESSARY PERMITS.

4. AVOID CLEANING, FUELING, OR MAINTAINING VEHICLES ON-SITE, EXCEPT IN A DESIGNATED AREA WHERE WASHWATER IS CONTAINED AND TREATED.

5. DELINEATE WITH FIELD MARKERS CLEARING LIMITS, EASEMENTS, SETBACKS, SENSITIVE OR CRITICAL AREAS, BUFFER ZONES, TREES, AND DRAINAGE COURSES.

6. PROTECT ADJACENT PROPERTIES AND UNDISTURBED AREAS FROM CONSTRUCTION IMPACTS USING VEGETATIVE BUFFER STRIPS, SEDIMENT BARRIERS OR FILTERS, DIKES, MULCHING, OR OTHER MEASURES AS APPROPRIATE.

7. PERFORM CLEARING AND EARTH MOVING ACTIVITIES ONLY DURING DRY WEATHER.

8. LIMIT AND TIME APPLICATIONS OF PESTICIDES AND FERTILIZERS TO PREVENT POLLUTED RUNOFF.

9. LIMIT CONSTRUCTION ACCESS ROUTES AND STABILIZE DESIGNATED ACCESS POINTS.

10. AVOID TRACKING DIRT OR OTHER MATERIALS OFF-SITE, CLEAN OFF-SITE PAVED AREAS AND SIDEWALKS USING DRY SWEEPING METHODS.

11. THE CONTRACTOR SHALL TRAIN AND PROVIDE INSTRUCTION TO ALL EMPLOYEES AND SUBCONTRACTORS REGARDING THE CONSTRUCTION BMPS

CONSTRUCTION BMPs | F

PROPERTY OWNER	TENANT
SAN MATEO COUNTY HARBOR DISTRICT 504 AVE ALHAMBRA EL GRANADA, CA 94018 TEL: 650/583-4400 EMAIL: JPRUETT@SMCHARBOR.COM	OCEAN CIDERS LLC 1256 CARLOS ST. #852 MOSS BEACH, CA 94038 TEL: 650/305-9454 CONTACT: MEREDITH KASYAN EMAIL: OCEANCIDERS@GMAIL.COM
ARCHITECT	**CONTRACTOR**
THE KASTROP GROUP, INC. 160 BIRCH STREET, SUITE B REDWOOD CITY, CA 94062 TEL: 650/299-0303 LIC. C-15783 EXP: 5/2023 CONTACT: D. MICHAEL KASTROP, AIA EMAIL: MIKE@KASTROPGROUP.COM	EUROPEAN ENTERPRISES 111 SOUTH ROAD BELMONT, CA 94002 TEL: 650/613-0266 LIC: 763968 CONTACT: LOUIS FRAYCHECK EMAIL: EUROPEAN_ENTERPRISES@MSN.COM
SURVEYOR	**CIVIL ENGINEER**
BGT LAND SURVEYING 871 WOODSIDE WAY SAN MATEO, CA 94401 TEL: 650/212-1030 LIC: 7591 CONTACT: LILLIAN LEE EMAIL: LLEE@BGTSURVEYING.COM	SIGMA PRIME GEOSCIENCES, INC 332 PRINCETON AVE HALF MOON BAY, CA 94019 TEL: 650/728-3590 LIC: 67264 CONTACT: CHARLES KISSICK EMAIL: SIGMAFRM@GMAIL.COM

PROJECT TEAM | E

THIS PROJECT IS FOR A BEACH CIDER BAR WHICH WILL INCLUDE PATHWAYS AND SEATING AREAS, PERIMETER FENCING, A GENERATOR AND PROPANE TANK, AND UNDERGROUND UTILITIES. A MOBILE TRAILER WILL PROVIDE ALL FOOD AND BEVERAGE SERVICES.

SCOPE OF WORK | D

ZONING DESIGNATION:	CCR/DR/CD
ASSESSOR'S PARCEL NUMBER:	047-083-060
BUILDING TYPE:	N/A
FIRE SPRINKLERS:	NON-SPRINKLERED
LOT AREA:	N/A
BUILDING HEIGHT:	N/A
JURISDICTION:	SAN MATEO COUNTY
CODE:	2019 CBC
AREA OF WORK:	7,530#
OCCUPANCY:	A-2
USE:	BEACH CIDER BAR

LOT INFORMATION | C

ARCHITECTURAL	
A00	COVER SHEET
CIVIL	
C-1	GRADING AND DRAINAGE PLAN
C-2	EROSION AND SEDIMENT CONTROL PLAN
BMPs	CONSTRUCTION BEST MANAGEMENT PRACTICES

SHEET INDEX | B

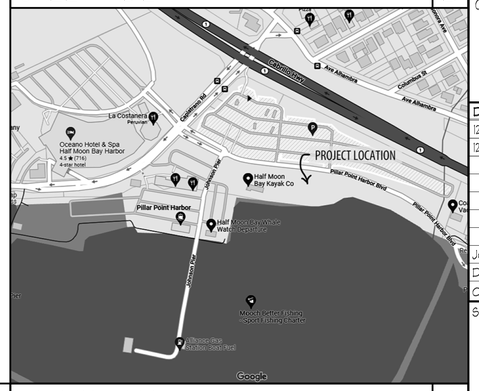

VICINITY MAP | A

THE KASTROP GROUP, INC.
ARCHITECTS
160 BIRCH STREET, SUITE B
REDWOOD CITY, CA 94062
T: 650.299.0303
www.kastropgroup.com

BEACH CIDER BAR

OCEAN CIDERS, LLC

2 PILLAR POINT HARBOR BLVD.
HALF MOON BAY, CA 94019

ORIGINAL SIGNATURE IN BLUE INK

LICENSED ARCHITECT DAVID M. KASTROP NO. C 15783 MAY 2023 STATE OF CALIFORNIA

THESE DRAWINGS CONSTITUTE THE ORIGINAL WORK OF THE ARCHITECTS AND MAY NOT BE USED WITHOUT THEIR WRITTEN CONSENT.

SHEET TITLE:
COVER SHEET

DATE	ISSUE TITLE
12/5/22	SCHEMATIC DESIGN
12/15/22	PLAN CHECK

JOB NO: 22832
DRAWN:
CHECKED: DMK

SCALE: AS NOTED

A0.0

OF

BLDG PERMIT APP NO:

2832: OCEAN CIDER, LLC - 2 PILLAR POINT HARBOR BLVD., HALF MOON BAY, CA 94019

© THE KASTROP GROUP, INC. 2020. FOR PRESENTATION ONLY, CANNOT BE USED, MODIFIED, DISTRIBUTED OR REPRODUCED WITHOUT THE KASTROP GROUP'S WRITTEN PERMISSION.

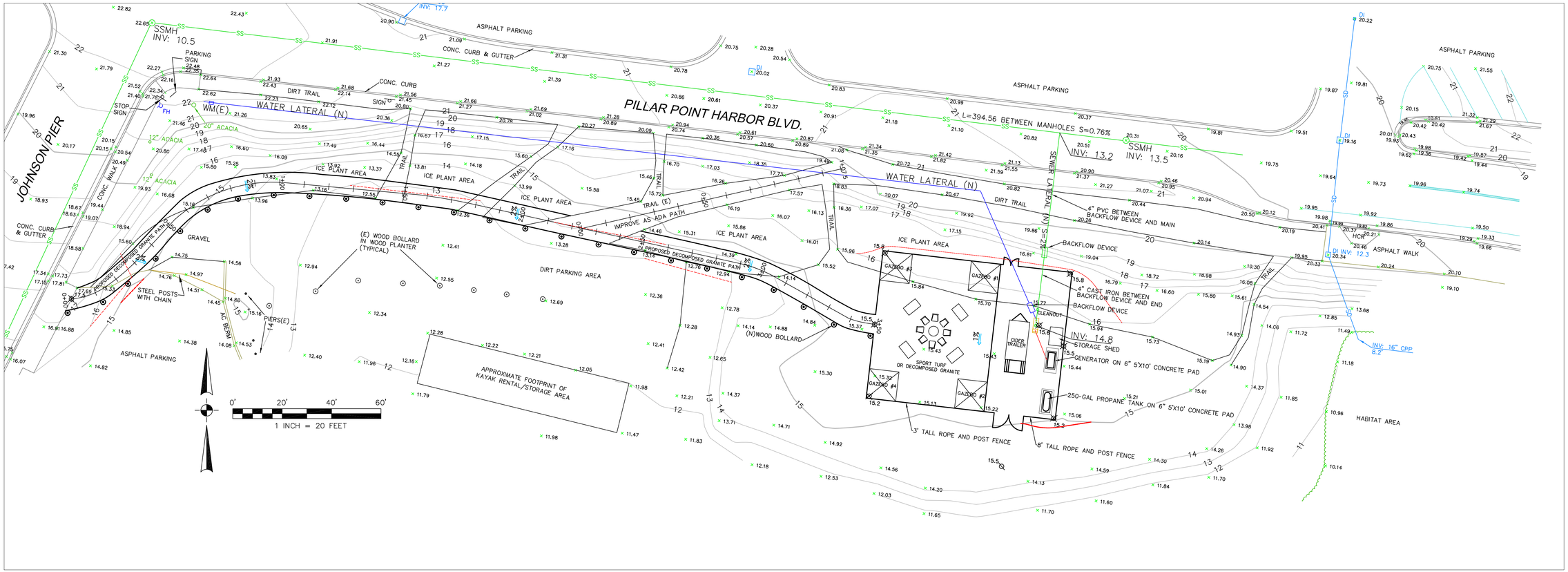

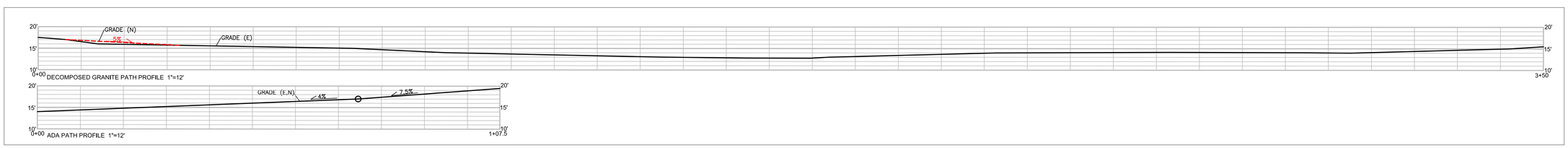

LEGEND

EXISTING CONTOURS

PROPOSED CONTOURS

E EXISTING
N NEW, OR PROPOSED

DIRECTION OF SURFACE DRAINAGE FLOW

15.52 EXISTING SPOT ELEVATION

15.5 PROPOSED SPOT ELEVATION

GENERAL NOTES

1. PLANS PREPARED AT THE REQUEST OF: MEREDITH KASYAN, BUSINESS OWNER
2. SURVEY BY BGT LAND SURVEYING, 11-2-22.
3. ELEVATIONS BASED ON ASSUMED DATUM.
4. THIS IS NOT A BOUNDARY SURVEY.
5. WATER AND SEWER WORK SHALL BE PERFORMED TO SATISFY LOCAL CODES.

EARTHWORK NOTES

CUT VOLUME =15 CY
FILL VOLUME = 15 CY

AREA OF DECOMPOSED GRANITE = XX SF
VOLUME OF DECOMPOSED GRANITE = XX CY

DRAINAGE NOTES

DRAINAGE DIRECTIONS AS SHOWN BY DRAINAGE ARROWS ON PLAN: POSITIVE DRAINAGE, OR OUT-SLOPING OF THE PATH SHALL BE MAINTAINED THROUGHOUT.

ADA PATH NOTES

PATH TO BE CONVERTED TO ADA PATH IS ALREADY WIDE ENOUGH WITH A SLOPE THAT IS GENTLE ENOUGH TO CONFORM TO AN ADA PATH. ONLY WORK REQUIRED IS THE DRESS THE SURFACE WITH DECOMPOSED GRANITE TO SMOOTH OUT BUMPS.

THERE ARE EXISTING ADA PARKING STALLS IN THE ASPHALT PARKING LOT ACROSS PILLAR POINT BOULEVARD.

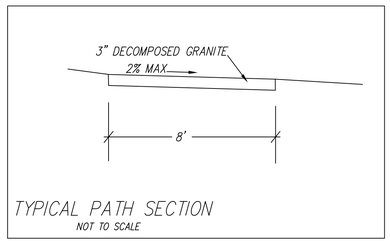

REGISTERED PROFESSIONAL ENGINEER
CHARLES M. KISSICK
No. 62264
9-30-23
EXPIRES
CIVIL
STATE OF CALIFORNIA

Sigma Prime Geosciences, Inc.
SIGMA PRIME GEOSCIENCES, INC.
332 PRINCETON AVENUE
HALF MOON BAY, CA 94019
(650) 728-3590
FAX: 728-3593

DATE: 12-13-22
DRAWN BY: CMK
CHECKED BY: AZG
REV. DATE:
REV. DATE:
REV. DATE:
REV. DATE:

GRADING AND DRAINAGE PLAN

OCEAN CIDERS
PILLAR POINT HARBOR
EL GRANADA
APN 047-083-060

SHEET
C-1

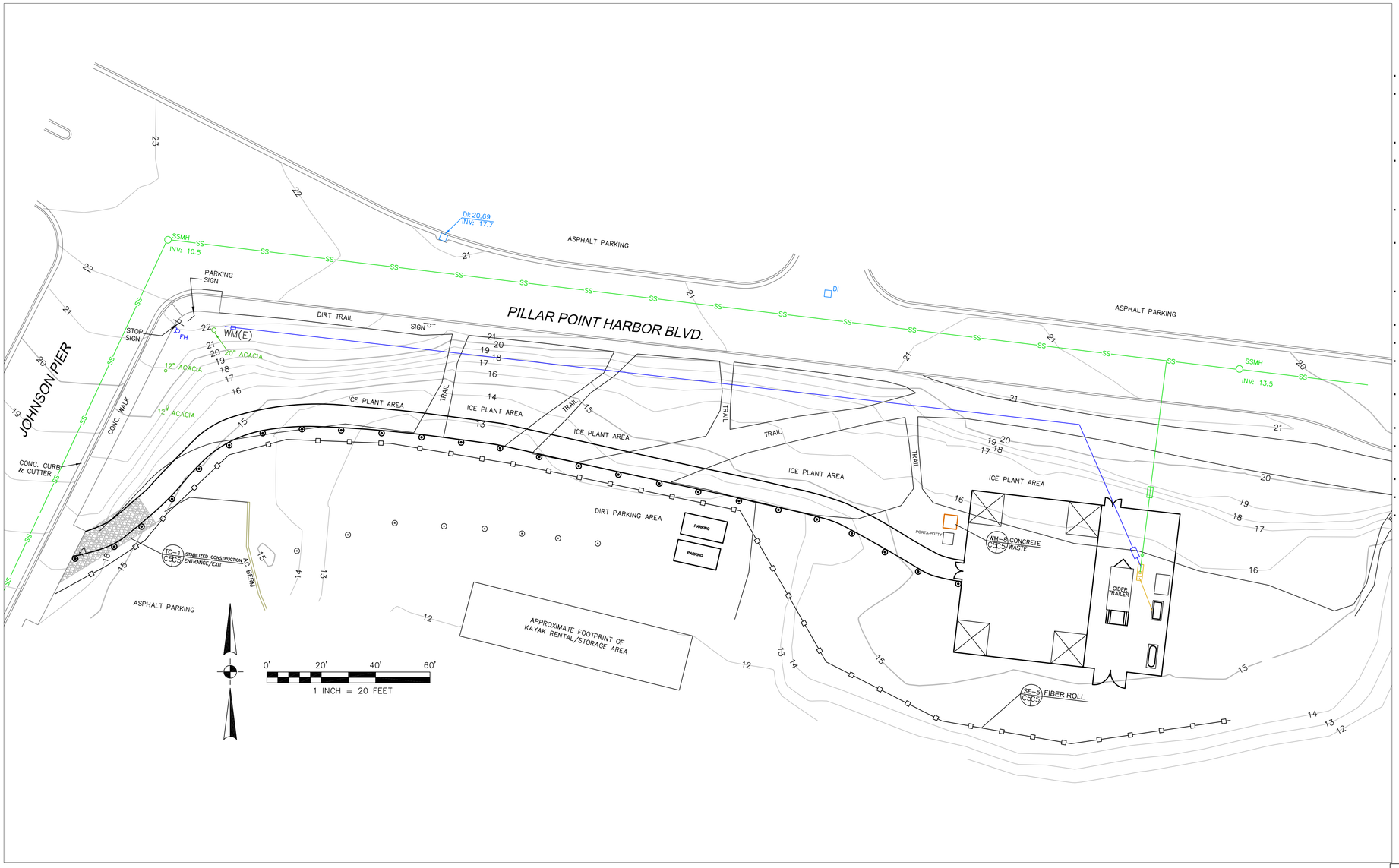

GENERAL EROSION AND SEDIMENT CONTROL NOTES

FIBER ROLE
INSTALL AT LOCATIONS SHOWN.
AFIX AS SHOWN IN DETAIL SE-5

- There will be no stockpiling of soil. All excavated soil will be hauled off-site as it is excavated.
- Perform clearing and earth-moving activities only during dry weather. Measures to ensure adequate erosion and sediment control shall be installed prior to earth-moving activities and construction.
- Erosion control materials to be on-site during off-season.
- Measures to ensure adequate erosion and sediment control are required year-round. Stabilize all denuded areas and maintain erosion control measures continuously between October 1 and April 30.
- Store, handle, and dispose of construction materials and wastes properly, so as to prevent their contact with stormwater.
- Control and prevent the discharge of all potential pollutants, including pavement cutting wastes, paints, concrete, petroleum products, chemicals, wash water or sediments, and non-stormwater discharges to storm drains and watercourses.
- Avoid cleaning, fueling, or maintaining vehicles on-site, except in a designated area where wash water is contained and treated.
- Limit and time applications of pesticides and fertilizers to prevent polluted runoff.
- Limit construction access routes to stabilized, designated access points
- Avoid tracking dirt or other materials off-site; clean off-site paved areas and sidewalks using dry sweeping methods.
- Train and provide instruction to all employees and subcontractors regarding the Watershed Protection Maintenance Standards and construction Best Management Practices.
- Placement of erosion materials is required on weekends and during rain events.
- The areas delineated on the plans for parking, grubbing, storage etc., shall not be enlarged or "run over."
- Dust control is required year-round.
- Erosion control materials shall be stored on-site.
- Provide secondary containment for porta-potty.

REGISTERED PROFESSIONAL ENGINEER
CHARLES M. KISSICK
No. 62264
9-30-23
EXPIRES
CIVIL
STATE OF CALIFORNIA

EROSION CONTROL POINT OF CONTACT

THIS PERSON WILL BE RESPONSIBLE FOR EROSION CONTROL AT THE SITE AND WILL BE THE COUNTY'S MAIN POINT OF CONTACT IF CORRECTIONS ARE REQUIRED.

NAME: MEREDITH KASYAN

TITLE/QUALIFICATION: BUSINESS OWNER

PHONE: 650-305-9454

PHONE:

E-MAIL: OCEANCIDERS@GMAIL.COM

CONCRETE WASTE MANAGEMENT WM-8

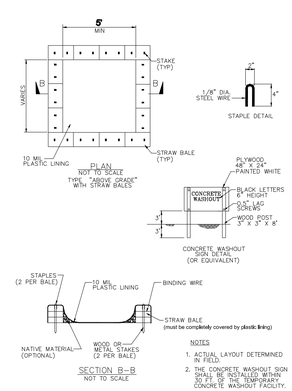

NOTES

1. ACTUAL LAYOUT DETERMINED IN FIELD.
2. THE CONCRETE WASHOUT SIGN SHALL BE PLACED WITHIN 50 FT OF THE TEMPORARY CONCRETE WASHOUT FACILITY.

FIBER ROLLS SE-5

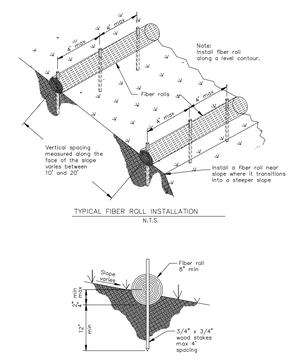

NOTES:
If more than one fiber rollis placed in a row, the rolls must be overlapped, not abutted.
Turn the ends of the fiber roll up-slope to prevent runoff from going around the roll.

STABILIZED CONSTRUCTION ENTRANCE/EXIT TC-1

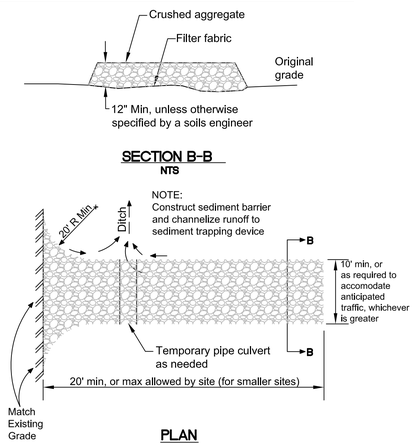

Sigma Prime Geosciences, Inc.
SIGMA PRIME GEOSCIENCES, INC.
332 PRINCETON AVENUE
HALF MOON BAY, CA 94019
(650) 728-3590
FAX 726-3593

DATE: 12-13-22
DRAWN BY: CMK
CHECKED BY: AZG
REV. DATE:
REV. DATE:
REV. DATE:

EROSION AND SEDIMENT CONTROL PLAN
OCEAN CIDERS
PILLAR POINT HARBOR
EL GRANADA
APN 047-083-060

SHEET
C-2

SAN MATEO COUNTYWIDE
Water Pollution Prevention Program
Clean Water. Healthy Community.

Construction Best Management Practices (BMPs)

Construction projects are required to implement the stormwater best management practices (BMP) on this page, as they apply to your project, all year long.

Materials & Waste Management

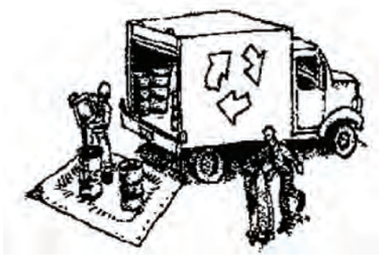

Non-Hazardous Materials

- ❑ Berm and cover stockpiles of sand, dirt or other construction material with tarps when rain is forecast or if not actively being used within 14 days.
- ❑ Use (but don't overuse) reclaimed water for dust control.

Hazardous Materials

- ❑ Label all hazardous materials and hazardous wastes (such as pesticides, paints, thinners, solvents, fuel, oil, and antifreeze) in accordance with city, county, state and federal regulations.
- ❑ Store hazardous materials and wastes in water tight containers, store in appropriate secondary containment, and cover them at the end of every work day or during wet weather or when rain is forecast.
- ❑ Follow manufacturer's application instructions for hazardous materials and be careful not to use more than necessary. Do not apply chemicals outdoors when rain is forecast within 24 hours.
- ☒ Arrange for appropriate disposal of all hazardous wastes.

Waste Management

- ☒ Cover waste disposal containers securely with tarps at the end of every work day and during wet weather.
- ☒ Check waste disposal containers frequently for leaks and to make sure they are not overfilled. Never hose down a dumpster on the construction site.
- ☒ Clean or replace portable toilets, and inspect them frequently for leaks and spills.
- ☒ Dispose of all wastes and debris properly. Recycle materials and wastes that can be recycled (such as asphalt, concrete, aggregate base materials, wood, gyp board, pipe, etc.)
- ☒ Dispose of liquid residues from paints, thinners, solvents, glues, and cleaning fluids as hazardous waste.

Construction Entrances and Perimeter

- ☒ Establish and maintain effective perimeter controls and stabilize all construction entrances and exits to sufficiently control erosion and sediment discharges from site and tracking off site.
- ☒ Sweep or vacuum any street tracking immediately and secure sediment source to prevent further tracking. Never hose down streets to clean up tracking.

Equipment Management & Spill Control

Maintenance and Parking

- ☒ Designate an area, fitted with appropriate BMPs, for vehicle and equipment parking and storage.
- ❑ Perform major maintenance, repair jobs, and vehicle and equipment washing off site.
- ❑ If refueling or vehicle maintenance must be done onsite, work in a bermed area away from storm drains and over a drip pan or drop cloths big enough to collect fluids. Recycle or dispose of fluids as hazardous waste.
- ❑ If vehicle or equipment cleaning must be done onsite, clean with water only in a bermed area that will not allow rinse water to run into gutters, streets, storm drains, or surface waters.
- ❑ Do not clean vehicle or equipment onsite using soaps, solvents, degreasers, or steam cleaning equipment.

Spill Prevention and Control

- ☒ Keep spill cleanup materials (e.g., rags, absorbents and cat litter) available at the construction site at all times.
- ☒ Inspect vehicles and equipment frequently for and repair leaks promptly. Use drip pans to catch leaks until repairs are made.
- ☒ Clean up spills or leaks immediately and dispose of cleanup materials properly.
- ☒ Do not hose down surfaces where fluids have spilled. Use dry cleanup methods (absorbent materials, cat litter, and/or rags).
- ☒ Sweep up spilled dry materials immediately. Do not try to wash them away with water, or bury them.
- ☒ Clean up spills on dirt areas by digging up and properly disposing of contaminated soil.
- ☒ Report significant spills immediately. You are required by law to report all significant releases of hazardous materials, including oil. To report a spill: 1) Dial 911 or your local emergency response number, 2) Call the Governor's Office of Emergency Services Warning Center, (800) 852-7550 (24 hours).

Earthmoving

- ☒ Schedule grading and excavation work during dry weather.
- ☒ Stabilize all denuded areas, install and maintain temporary erosion controls (such as erosion control fabric or bonded fiber matrix) until vegetation is established.
- ☒ Remove existing vegetation only when absolutely necessary, and seed or plant vegetation for erosion control on slopes or where construction is not immediately planned.
- ☒ Prevent sediment from migrating offsite and protect storm drain inlets, gutters, ditches, and drainage courses by installing and maintaining appropriate BMPs, such as fiber rolls, silt fences, sediment basins, gravel bags, berms, etc.
- ❑ Keep excavated soil on site and transfer it to dump trucks on site, not in the streets.

Contaminated Soils

- ☒ If any of the following conditions are observed, test for contamination and contact the Regional Water Quality Control Board:
  - Unusual soil conditions, discoloration, or odor.
  - Abandoned underground tanks.
  - Abandoned wells
  - Buried barrels, debris, or trash.

Paving/Asphalt Work

- ❑ Avoid paving and seal coating in wet weather or when rain is forecast, to prevent materials that have not cured from contacting stormwater runoff.
- ❑ Cover storm drain inlets and manholes when applying seal coat, tack coat, slurry seal, fog seal, etc.
- ❑ Collect and recycle or appropriately dispose of excess abrasive gravel or sand. Do NOT sweep or wash it into gutters.
- ❑ Do not use water to wash down fresh asphalt concrete pavement.

Sawcutting & Asphalt/Concrete Removal

- ❑ Protect nearby storm drain inlets when saw cutting. Use filter fabric, catch basin inlet filters, or gravel bags to keep slurry out of the storm drain system.
- ❑ Shovel, abosorb, or vacuum saw-cut slurry and dispose of all waste as soon as you are finished in one location or at the end of each work day (whichever is sooner!).
- ❑ If sawcut slurry enters a catch basin, clean it up immediately.

Concrete, Grout & Mortar Application

- ❑ Store concrete, grout, and mortar away from storm drains or waterways, and on pallets under cover to protect them from rain, runoff, and wind.
- ❑ Wash out concrete equipment/trucks offsite or in a designated washout area, where the water will flow into a temporary waste pit, and in a manner that will prevent leaching into the underlying soil or onto surrounding areas. Let concrete harden and dispose of as garbage.
- ❑ When washing exposed aggregate, prevent washwater from entering storm drains. Block any inlets and vacuum gutters, hose washwater onto dirt areas, or drain onto a bermed surface to be pumped and disposed of properly.

Landscaping

- ❑ Protect stockpiled landscaping materials from wind and rain by storing them under tarps all year-round.
- ❑ Stack bagged material on pallets and under cover.
- ❑ Discontinue application of any erodible landscape material within 2 days before a forecast rain event or during wet weather.

Painting & Paint Removal

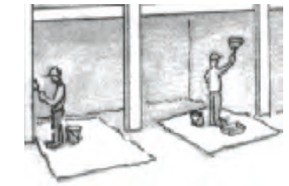

Painting Cleanup and Removal

- ❑ Never clean brushes or rinse paint containers into a street, gutter, storm drain, or stream.
- ❑ For water-based paints, paint out brushes to the extent possible, and rinse into a drain that goes to the sanitary sewer. Never pour paint down a storm drain.
- ❑ For oil-based paints, paint out brushes to the extent possible and clean with thinner or solvent in a proper container. Filter and reuse thinners and solvents. Dispose of excess liquids as hazardous waste.
- ❑ Paint chips and dust from non-hazardous dry stripping and sand blasting may be swept up or collected in plastic drop cloths and disposed of as trash.
- ❑ Chemical paint stripping residue and chips and dust from marine paints or paints containing lead, mercury, or tributyltin must be disposed of as hazardous waste. Lead based paint removal requires a state-certified contractor.

Dewatering

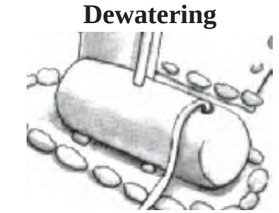

- ❑ Discharges of groundwater or captured runoff from dewatering operations must be properly managed and disposed. When possible send dewatering discharge to landscaped area or sanitary sewer. If discharging to the sanitary sewer call your local wastewater treatment plant.
- ❑ Divert run-on water from offsite away from all disturbed areas.
- ❑ When dewatering, notify and obtain approval from the local municipality before discharging water to a street gutter or storm drain. Filtration or diversion through a basin, tank, or sediment trap may be required.
- ❑ In areas of known or suspected contamination, call your local agency to determine whether the ground water must be tested. Pumped groundwater may need to be collected and hauled off-site for treatment and proper disposal.

Storm drain polluters may be liable for fines of up to $10,000 per day!

KT2021 923 Meredith Kasyan
Moss Beach CA, 94038

SCOPE OF WORK

FABRICATION OF CUSTOM TRAILER FOR USE IN DISPENSING REFRIGERATED BEVERAGES AND PRE-PREPARED FOOD AS A MOBILE DISPENSING FACILITY. PROVIDE ELECTRICAL, PLUMBING AND MECHANICAL CONNECTIONS IN PREPARATION FOR NEW EQUIPMENT INSTALLATION AS REQUIRED. TO BE USED IN CONCERT WITH A LOCAL COMMISSARY FOR SUPPLYING AND CLEANING NEEDS.

PRIMARY USE: DISTRIBUTION ALCOHOLIC/NON-ALCOHOLIC BEVERAGES AND PRE-PREPARED FOOD.

PLUMBING NOTES

1. SHUT-OFF VALVES TO BE PROVIDED FOR ALL PLUMBED EQUIPMENT
2. SINK SHALL HAVE HOT AND COLD WATER UNDER PRESSURE. HOT WATER SHALL BE 120 DEGREES FAHRENHEIT MINIMUM.
3. HOLDING TANKS TO BE PROVIDED FOR SINKS.
   a. SEWAGE TANK TO BE 15% LARGER THAN WATER SUPPLY TANK MIN.
4. SEWAGE AND OTHER WASTE FLUIDS SHALL BE REMOVED FROM THE TRUCK AND DISPOSED OF AT AN APPROVED LOCATION
5. CW AND WASTE PLUMBING PIPE TO BE PEX TUBING WITH FLEX CONNECTIONS AS REQUIRED BY LOCAL CODE
6. HW PIPEING TO BE PEX WITH 1/2" INSULATION MIN.
7. ALL VENT LINES TO BE ABS PIPING AND A MINIMUM 1-1/4" OR 1-1/2" AS APPROPRIATE PER COUNTY CODE AND UPC
8. WASTE VENTS MUST PENETRATE EXTERIOR NO LOWER THAN 6' ABOVE GROUND LEVEL
9. WATER HEATER RELIEF VALVE DRAIN TO BE SIZED TO MATCH WATER HEATER RELIEF VALVE AND PIPED WITH TYPE K COPPER TUBING

GENERAL NOTES:

1. ALL NEWLY INSTALLED SURFACES ARE TO BE EASILY CLEANABLE SEE TYPICAL DETAILS
2. SEAL ALL GAPS WITH ETHER NSF APPROVED CAULKING OR WELD AND BUFF SURFACE CLEAN.
3. ALL DIMENSIONS TO BE FIELD VERIFIED BEFORE INSTALLATION OF MATERIALS OR COMPONENTS.
4. SOAP AND DISPOSABLE TOWEL DISPENSER TO BE INSTALLED WITH-IN REACH OF ALL HAND SINKS.
5. BOTTOM OF EGRESS WINDOW TO BE NO MORE THAN 48" ABOVE FINISH FLOOR.
6. EGRESS WINDOW SHALL BE HAND OPERABLE AND REQUIRE NO SPECIAL OPERATION FROM WITH-IN TO OPEN.
7. EQUIPMENT MAY ONLY BE SWAPPED OUT FOR LIKE/EQUAL UNITS WITH PRIOR APPROVAL

ELECTRICAL NOTES:

1. LIGHTING LEVELS SHALL BE 50 FOOT CANDLES AT ALL WORK SURFACES (36" AFF)
2. ADDITIONAL CONVINCE OUTLETS TO BE ADDED PER OWNERS DIRECTION IN COORDINATION WITH LICENSED ELECTRICIAN.
3. ALL OUTLETS TO BE AFCI & GFCI DUPLEX TYPE OUTLETS U.N.O.
4. LIGHT FIXTURES AHSLL NOT PROTRUDE MORE THAN 3" BELOW 74" AFF.
5. BOTTOM OF ELECTRICAL PANEL SHALL BE 2'-0" MIN. AFF MIN.
6. ELECTRICAL OUTLETS TO BE ETHER 12" AFF OR 8" ABOVE COUNTER TOP. COORDINATE FINAL LOCATION TO EQUIPMENT AS NEEDED.

COMPLIANCE NOTES:

1. SECURE ALL APPLIANCES PER MANUFACTURERS REQUIREMENTS AND PER WAC 296-150V & WAC 296-150V-1090

SHEET INDEX:

FS-0.0.0	Title Sheet
FS- 1.0.0	Equipment Plan
FS- 1.1.0	Overall Dimensions
FS- 1.2.0	Plumbing Plan
FS- 1.3.0	Electrical Plan
FS- 1.4.0	Typical Details
FS- 1.4.1	Typical Details
FS- 1.4.2	Typical Details

KARPATIA

Designer: KARPATIA DREAMS DRAFTING & DESIGN

Document Identification
Coordination ☐ Submittal ☐ Shop Drawing ☐
Permit ☑ Revision ☐ Fabrication ☐

This Document and its contents are the property of Karpatia Dreams and shall not be used for any purpose other than this sheet. Do Not Reproduce with out express written consent.

Sheet Title: Title Block

Owner Info: Meredith Kasyan

N/W | Chk BY: | Plot Date: 2/2/2022 | Drawn By: N/W | Project#: KT2021 923 | Scale: As-Shown

Revision	Description	Date
-	-	-
-	-	-
-	-	-
-	-	-
-	-	-

Project Name: KT2021 923 Meredith Kasyan Bar Trailer

Page No: FS-0.0.0

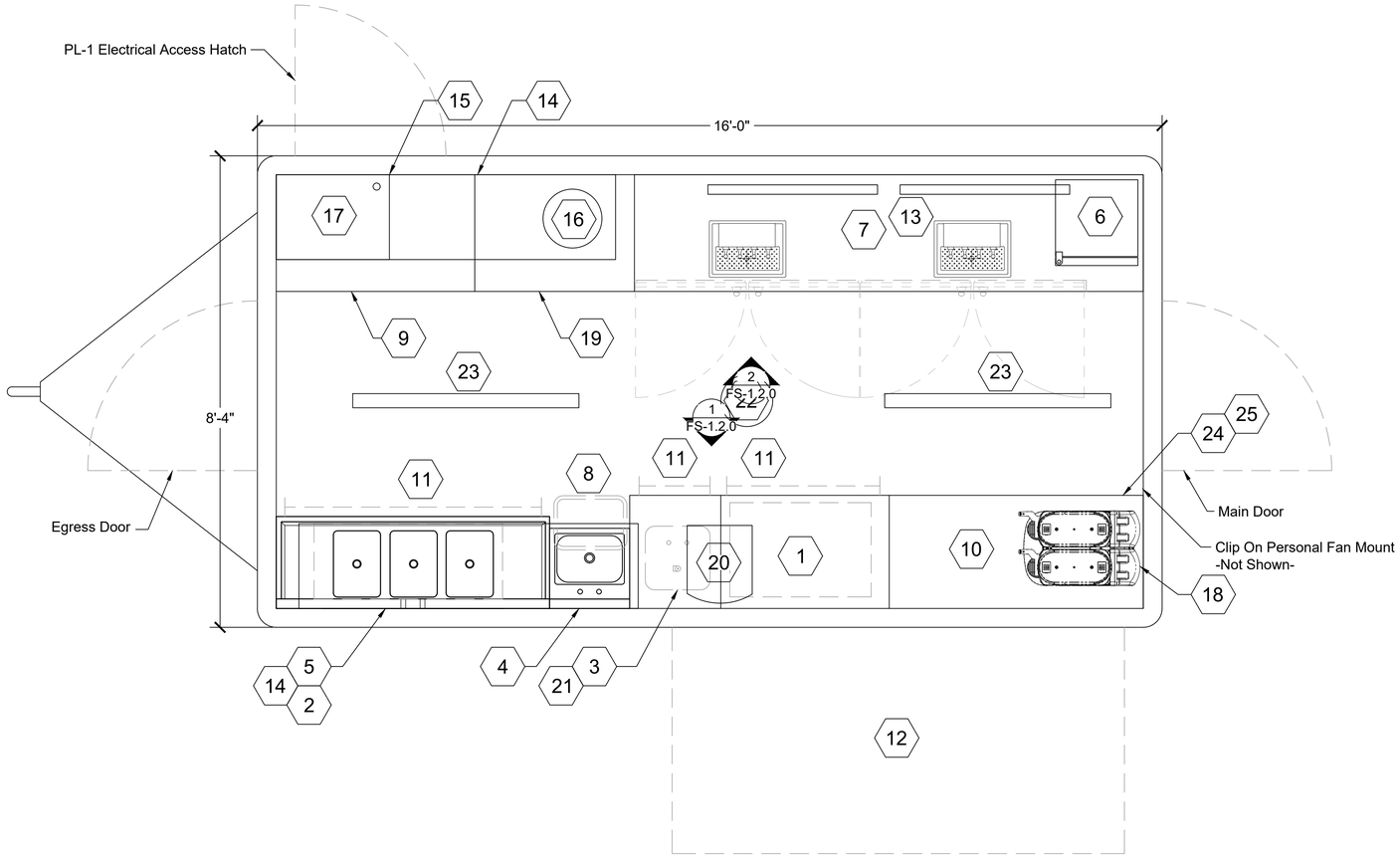

Overall Plan View 1
Scale: 3/4" = 1' - 0" -

Equipment Schedule

Item #	Count	Description	MFG	Model	Notes
1	1	30 Gal. Water Tank	Ronco Plastics	R-RVB157	w/Water Inlet 3/4" Water Inlet & 5/8" Vent w/Access Hatch
2	1	45 Gal. Gray Water Tank	Ronco Plastics	R-RVB318	-
3	1	4 Gal. Water Heater	Rosch	ES4	-
4	1	Hand Sink	Regency	600HS17SPDST	-
5	1	Three Comp Sink	Regency	600S3101412G	-
6	1	Countertop Cooler	Edgestar	BWC121SSLT	-
7	1	Direct Draw Cooler	Perlick	DDS108	-
8	1	Waste Basket	Lavex Janitorial	475WC41GY	-
9	1	Electrical Compartment	TBD	Custom	-
10	1	Custom Counter w/Under Shelf	TBD	Custom	-
11	4	Water Service Closure Panels	TBD	Custom	-
12	1	Consession Awning	TBD	Custom	-
13	2	Display Menu	TBD	Custom	32" Screens w/Wall Mounts USB compatable
14	4	Wall Shelf	Regency	600WS1872HD	-
15	1	Microwave Wall Shelf	Regency	600MS1824	-
16	1	Crock Pot	TBD	TBD	-
17	1	Microwave	TBD	TBD	-
18	1	Slushy Machine	TBD	TBD	-
19	1	Undercoutner Storage	Custom	Custom	-

1

Equipment Schedule

Item #	Count	Description	MFG	Model	Notes
20	1	POS System	TBD	TBD	-
21	1	Water Pump	SHURflow	2088-394-154	-
22	1	Radient Heater	Broan	Model 157	-
23	2	LED Light	Columbia Lighting	MPS4-40HL-CW-EDU-NXES	-
24	1	ABC Fire Extinguisher	Uline	S-14434	20 Lbs.
25	1	Emergency Medical Kit	TBD	TBD	By Owner

Finish Schedule

Surface	Material	Food Contact
Walls	Stainless Steel Sheeting	Accidental
Counter Tops	Stainless Steel	Accidental
Storage Compartment	Stainless Steel	Accidental
Floors	Poured Seamless Epoxy System	Accidental
Ceiling	Stainless Steel Sheeting	Accidental
Doors	Stainless Steel, Plastic Polymers	Accidental
Windows	Aluminum, Plastic Polymer	Accidental

KARPATIA

Designer: KARPATIA DESIGN & DRAFTING SERVICES

Document Identification
Coordination ☐ Submittal ☐ Shop Drawing ☐
Permit ☑ Revision ☐ Fabrication ☐

This Document and its contents are the property of Karpatia Design and Drafting Services. Do not reproduce this sheet. Do Not Reproduce with out express written consent.

Sheet Title: Equipment Plan

Owner Info: Meredith Kasyan

Revision	Description	Date	Chk BY:	N/W
1	Permit Review Corrections	Mar-3-22		

Scale: As-Shown | Project#: KT2021 923 | Drawn By: N/W | Plot Date: 2/2/2022

Project Name: KT2021 923 Meredith Kasyan Bar Trailer

Page No: FS-1.0.0

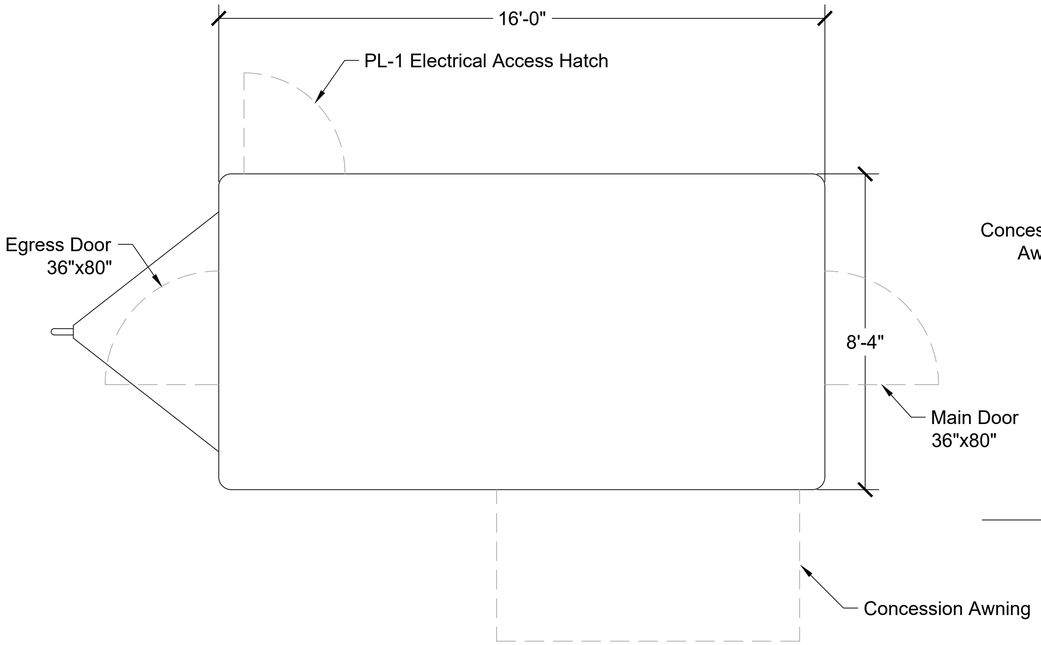

Overall Plan View 1
Scale: 1/2" = 1' - 0" -

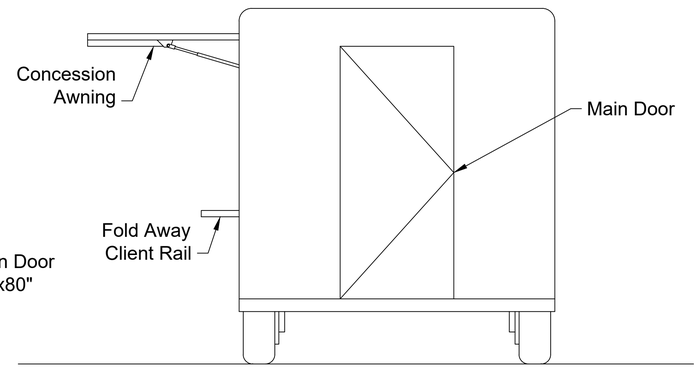

Rear of Trailer View 2
Scale: 1/2" = 1' - 0" -

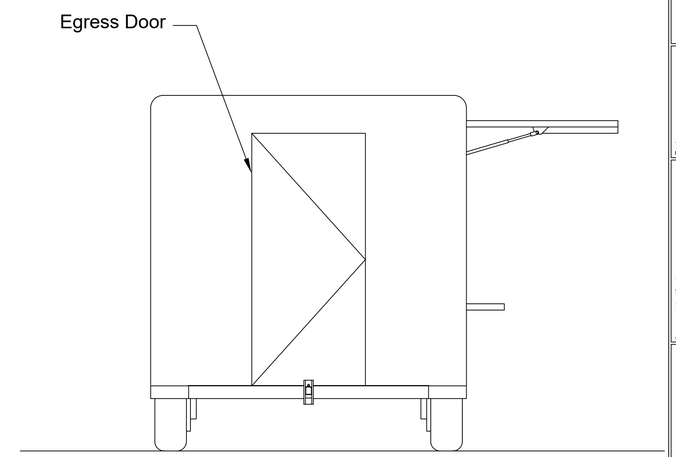

Front of Trailer View 3
Scale: 1/2" = 1' - 0" -

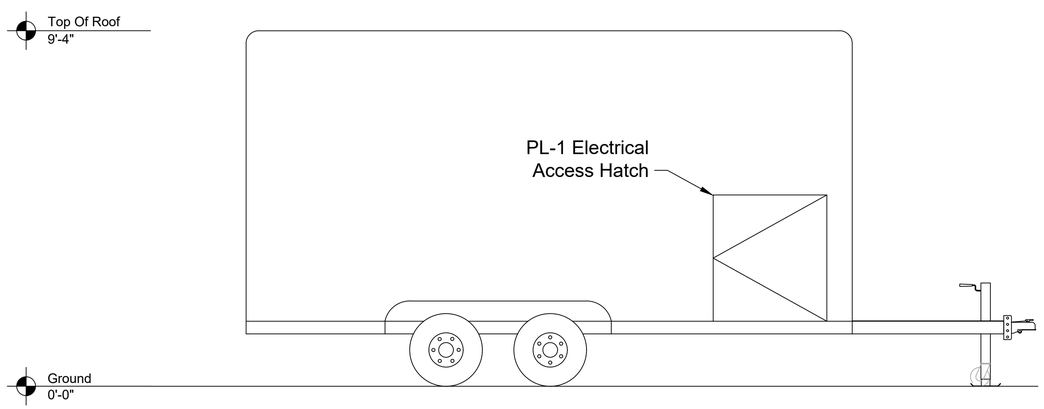

Driver Side Elevation Plan 4
Scale: 1/2" = 1' - 0" -

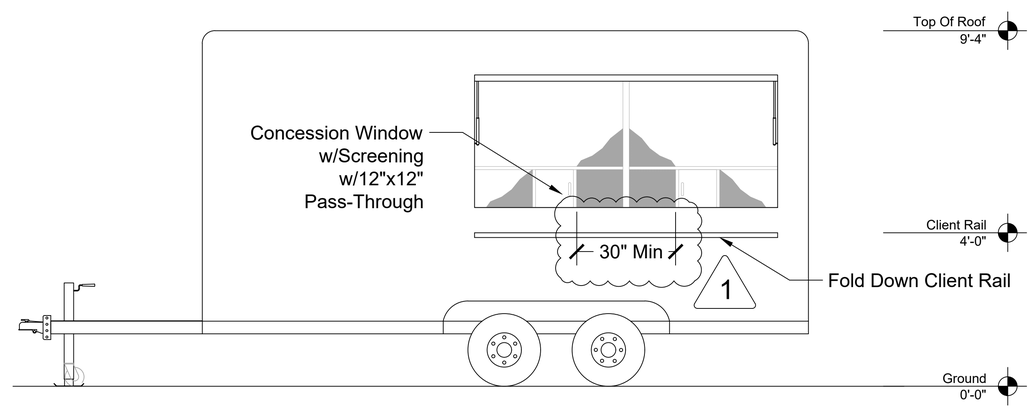

Client Side Elevation Plan 5
Scale: 1/2" = 1' - 0" -

Typical Finish Schedule

Surface	Material	Finish
Exterior Walls	Stainless Steel or Aluminum Panels	Paint, Wrap, Clear Coat, or None
Roof	Stainless Steel or Aluminum Panels	Paint, Wrap, Clear Coat, or None
Trailer Tongue	Black Iron Steel And Aluminum Plate	Painted or None
Doors/Hatches	Steel, Aluminum, Plastic Combinations	Painted or None
Concession Window	Steel, Aluminum, Plastic Combinations	Painted or None
Client Rail	Stainless Steel or Aluminum	None

KARPATIA

Designer: KARPATIA DESIGN & DRAFTING SERVICES

Document Identification
Coordination ☐ Submittal ☐ Shop Drawing ☐
Permit ☐ Revision ☑ Fabrication ☐

This Document and its contents are the property of Karpatia Design and Drafting Services. Do not reproduce this sheet. Do Not Reproduce with out express written consent.

Sheet Title: Exterior Overall Plan

Owner Info: Meredith Kasyan

Scale:	As-Shown	Project#:	KT2021 923	Drawn By:	N/W	Plot Date:	2/2/2022	Chk BY:	N/W

Revision:	Description	Date
1	Permit Review Corrections	Mar-3-22

Project Name: KT2021 Meredith Kasyan Bar Trailer

Page No: FS-1.1.0

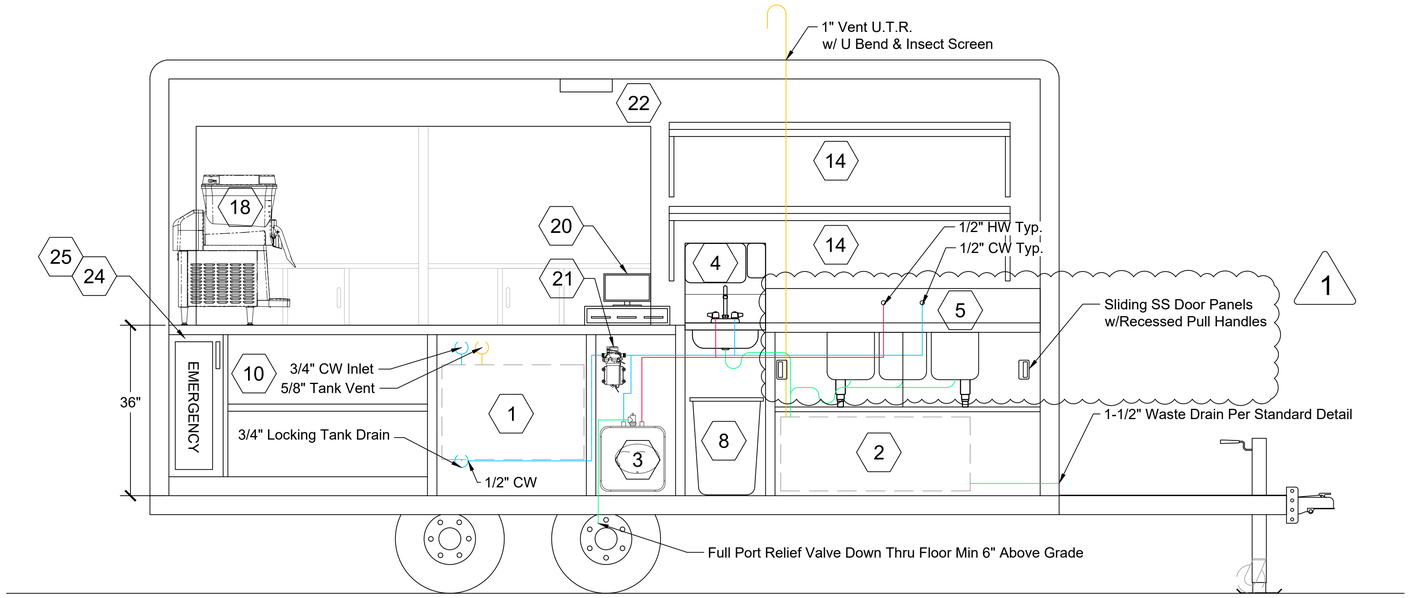

Interior Section/Plumbing View 1
Scale: 3/4" = 1' - 0" -

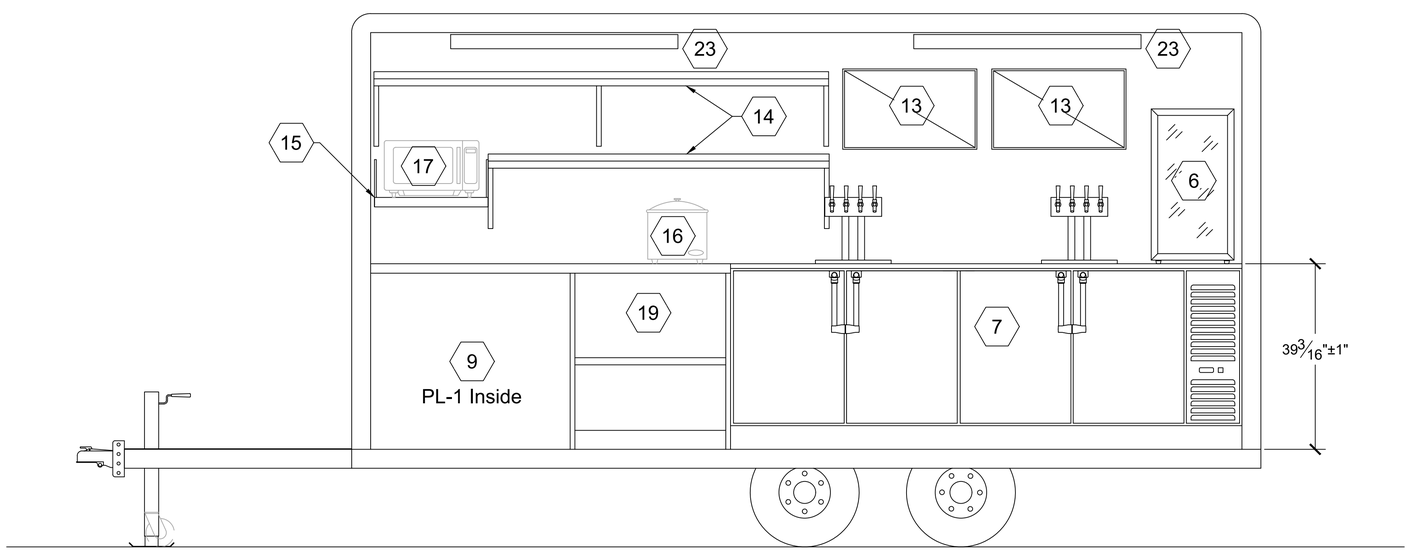

Interior Section/Plumbing View 2
Scale: 3/4" = 1' - 0" -

KARPATIA

Designer: KARPATIA DESIGN & DRAFTING SERVICES

Document Identification
Coordination ☐ Submittal ☐ Shop Drawing ☐
Permit ☑ Revision ☐ Fabrication ☐

This Document and its contents are the property of Karpatia Design and Drafting Services. Do Not Reproduce the sheet. Do Not Reproduce with out express written consent.

Sheet Title: Plumbing Plan Layout

Owner Info: Meredith Kasyan

Scale:	As-Shown	Project#:	KT2021 923	Drawn By:	N/W	Plot Date:	2/2/2022	Chk BY:	N/W

Revision	Description	Date
1	Permit Review Corrections	Mar-3-22

Project Name: KT2021 Meredith Kasyan Bar Trailer

Page No: FS-1.2.0

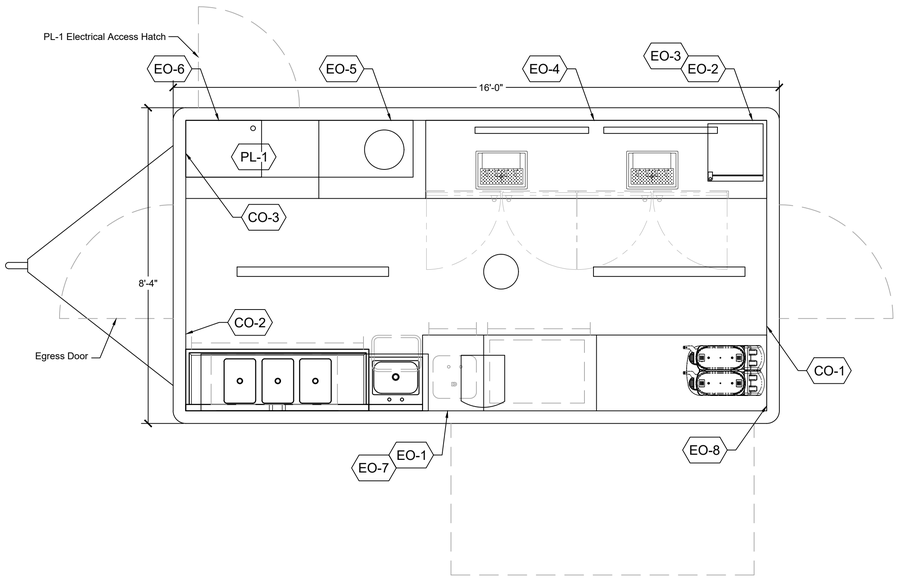

Plan View 1
Scale: 1/2" = 1' - 0" -

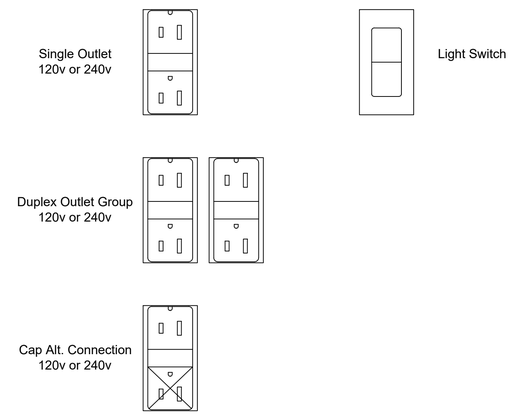

Outlet Legend 2
Scale: NTS -

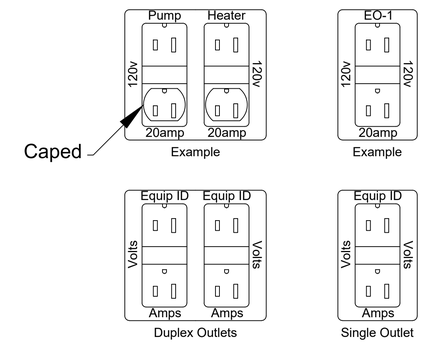

Outlet Identification Detail 3
Scale: NTS -

*Electrical Schematic is Diagrammatic Only Field Coordinate Final Panel Layout and Cross Check with Manufacturers Recommendations.

*All Outlets to Mark Voltage at Connection

*Fuse Size is Min Required size. See Schematic for outlet based units.

Electrical Panel Plan

PL-1

Item #	Count	Description	Volts	Phase	Amps	Watts	Fuse
3	1	4 Gal. Water Heater	120	1	12	1440	20amp
21	1	Water Pump	115	1	1.04	119.6	10amp
6	1	Countertop Cooler	120	1	1.2	144	15amp
7	1	Direct Draw Cooler	120	1	4.2	504	15amp
13	2	Display Menu	120	1	TBD	TBD	15amp
16	1	Crock Pot	120	1	15max	1500max	20amp
17	1	Microwave	120	1	10max	1000max	20amp
18	1	Slushy Machine	120	1	15max	1500max	20amp
20	1	POS System	120	1	10max	-	15amp
22	1	Radient Heater	120	1	10.7	1250	20amp
23	2	LED Lights	120	1	>1	66.5	5amp

Grouped

TBD Reference Only

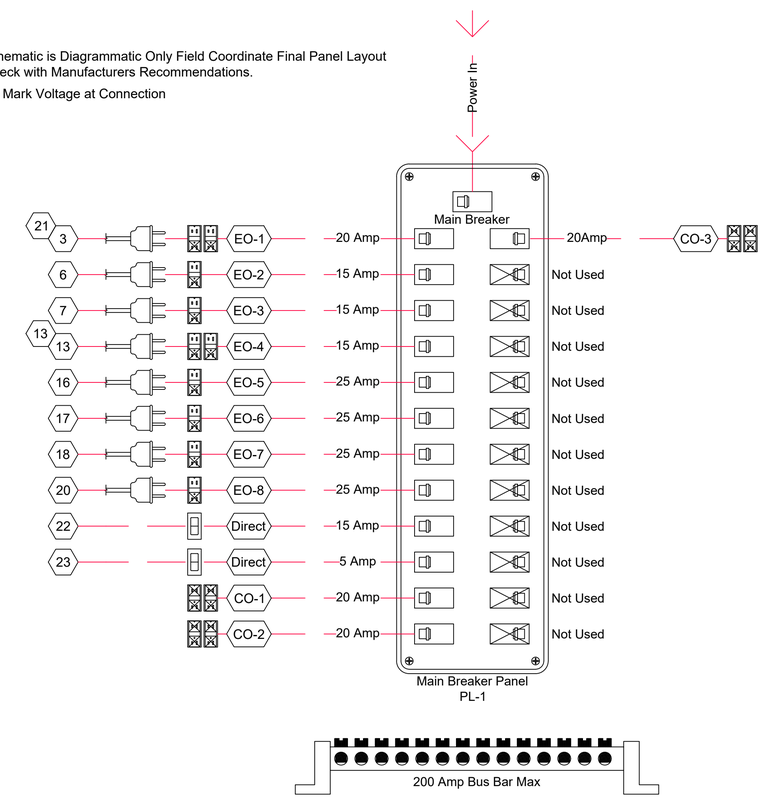

Electrical Schematic 4
Scale: NTS -

KARPATIA DESIGN & DRAFTING SERVICES

Designer: Meredith Kasyan

Document Identification: Coordination ☐ Submittal ☐ Shop Drawing ☐ Permit ☐ Revision ☐ Fabrication ☐

This Document and its contents are the property of Karpatia Design and Drafting Services. Do not reproduce this sheet. Do Not Reproduce with out express written consent.

Sheet Title: Electrical Panel Plan

Owner Info: Meredith Kasyan

Revision	Description	Date
-	-	-
-	-	-
-	-	-
-	-	-
-	-	-

Scale: As-Shown | Project#: KT2021 923 | Drawn By: NJW | Plot Date: 2/2/2022 | CHK BY: NJW

Project Name: KT2020 275 Airstream

Page No: FS-1.3.0

*Typical Details Apply to New Construction only, Retrofit and Refurbished Vehicles to be Evaluated for Work Safe Finishes as Req'd by Local Code Enforcement.

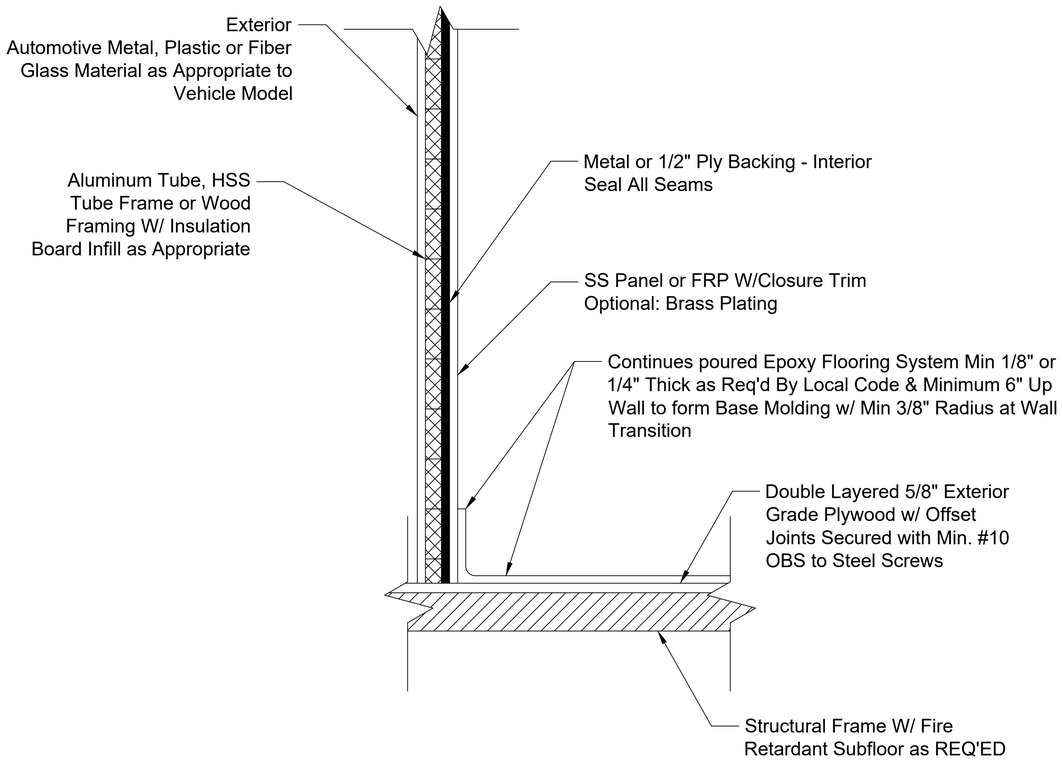

Typical Floor and Wall Construction (1)
Scale: NTS (-)

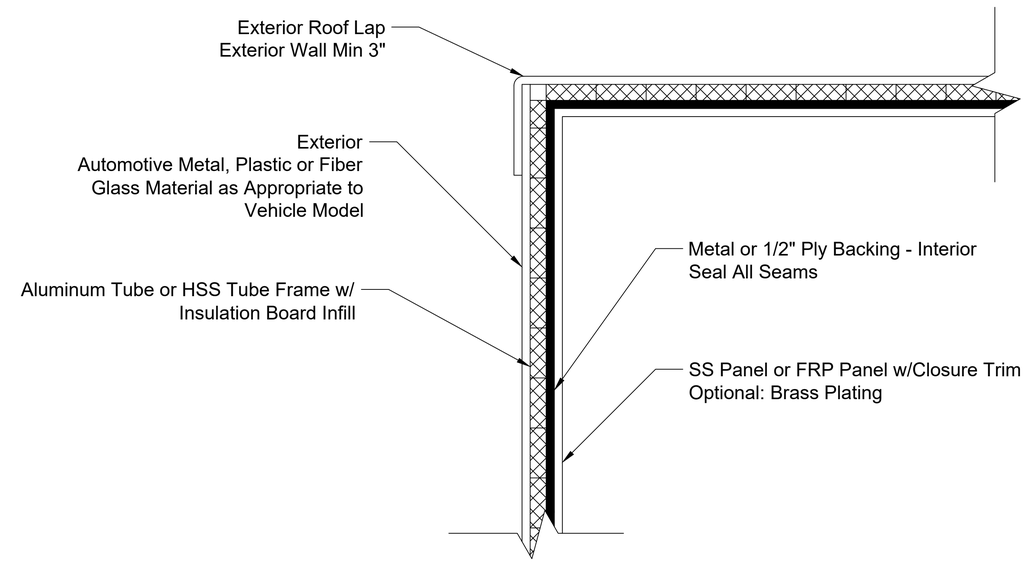

Typical Roof and Wall Construction (2)
Scale: NTS (-)

KARPATIA

Designer: KARPATIA DRAFTING & DESIGN

Document Identification
Coordination ☐ Submittal ☑ Shop Drawing ☐
Permit ☐ Revision ☐ Fabrication ☐

This Document and its contents are the property of Karpatia Drafting and Design and shall not be reproduced without express written consent.

Sheet Title: Typical Structural/Finishing Details

Owner Info: -

Scale:	As-Shown	Project#:	KT2021 003	Drawn By:	NJW	Plot Date:	2/2/2022	CHK BY:	NJW

Revision	Description	Date
-	-	-

Project Name: Karpatia Typical Details

Page No: FS-1.4.0

-All Fittings to be Installed with Operable/Serviceable elements Facing Up or Towards the Operator as Req'd U.N.O.
-All PVC Fittings to be Sch40 U.N.O. (Unless Noted Otherwise)
-All Metal Pipe/Fittings to be Brass Food Safe Fittings

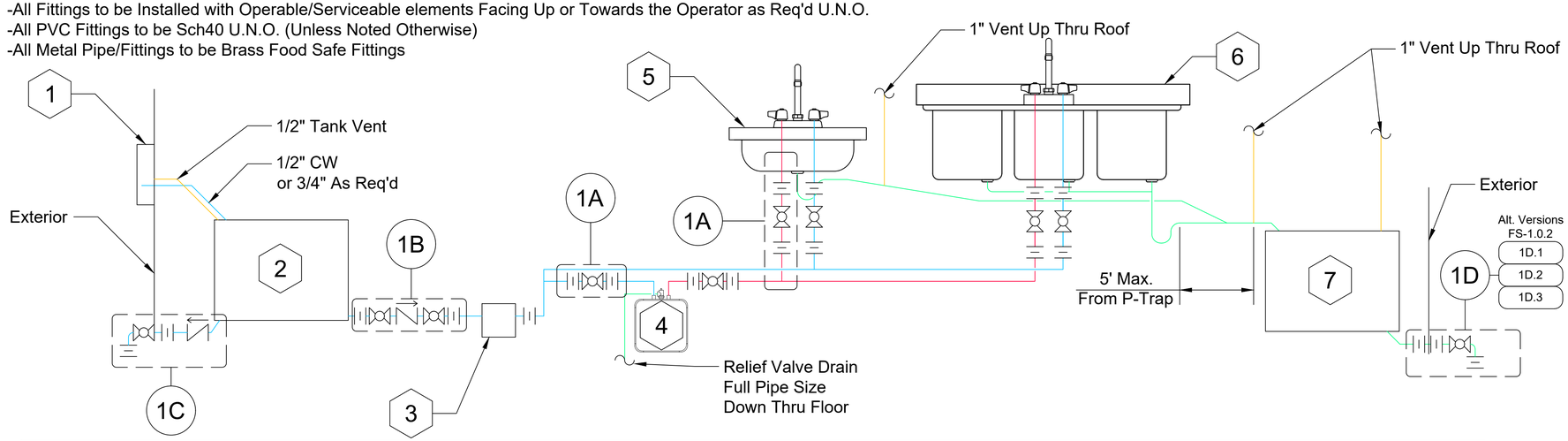

Callout Notes

Item #	Description	Size	Material	Details
1	Fresh Water Inlet	Varies	PVC or Metal	Locking Water Inlet Access box w/ 1/2" Water inlet w/ 1/2" Vent
2	Fresh Water Tank	Varies	NSF Approved Polymer	-
3	Water Pump	3gpm	-	-
4	Water Heater	0.5gpm	-	0.5 GPM Min. Water heater or Point of Use Heater. Point of User Heater to Sink Connection Less than 12" Typ.
5	Hand Sink	Varies	404 SS	-
6	Three Comp or Other Sink	Varies	404 SS	-
7	Gray Water Tank	Varies	NSF Approved Polymer	-

Water/Gray Water Plumbing Schematic (1)

Scale: NTS (-)

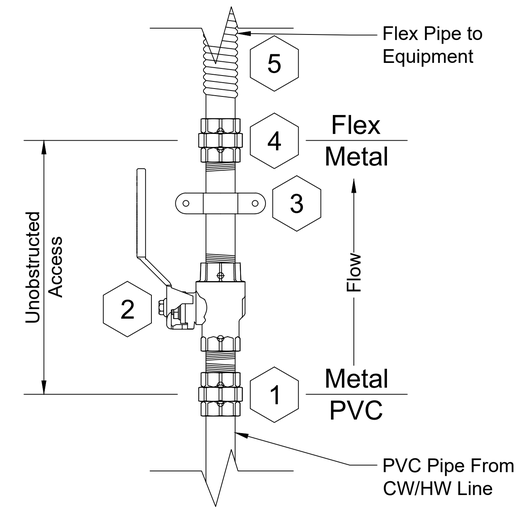

Item #	Description
1	PVC To Metal Pipe Union
2	Isolation Valve (Ball) Typ.
3	Pipe Anchor Point
4	Union
5	Flexible Pipe to Equipment

Isolation Valve Assembly Detail (1A)

Scale: NTS (-)

-All Pipe and Fittings Sized Per Plan See Layout Plan.

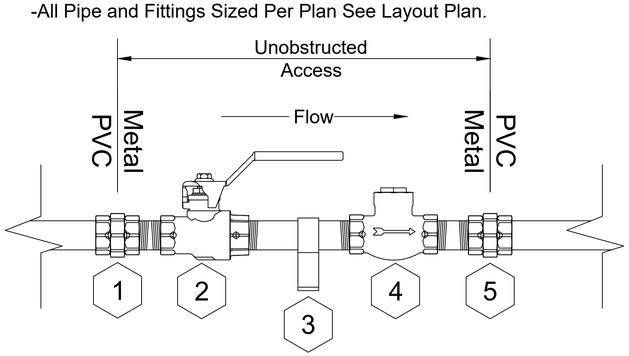

Item #	Description
1	PVC To Metal Pipe Union
2	Isolation Valve (Ball) Typ.
3	Pipe Anchor Point
4	Check Valve
5	Metal To PCV Pipe Union

Check Valve Assembly (1B)

Scale: NTS (-)

-All Pipe and Fittings 3/4" U.N.O.

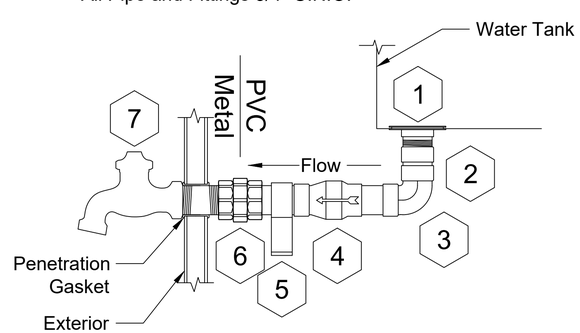

Item #	Description
1	Tank Bulkhead Fitting - Self Aligning Recommended
2	Threaded to Slip Adaptor
3	90° Short Radius Elbow
4	Check Valve
5	Pipe Support/Anchor as applicable
6	PVC To Metal Pipe Union
7	Locking Hose Bib - Secure With Light Thread Lock

Check Valve Drain Assembly (1C)

Scale: NTS (-)

-All Pipe and Fittings 1-1/2" U.N.O.

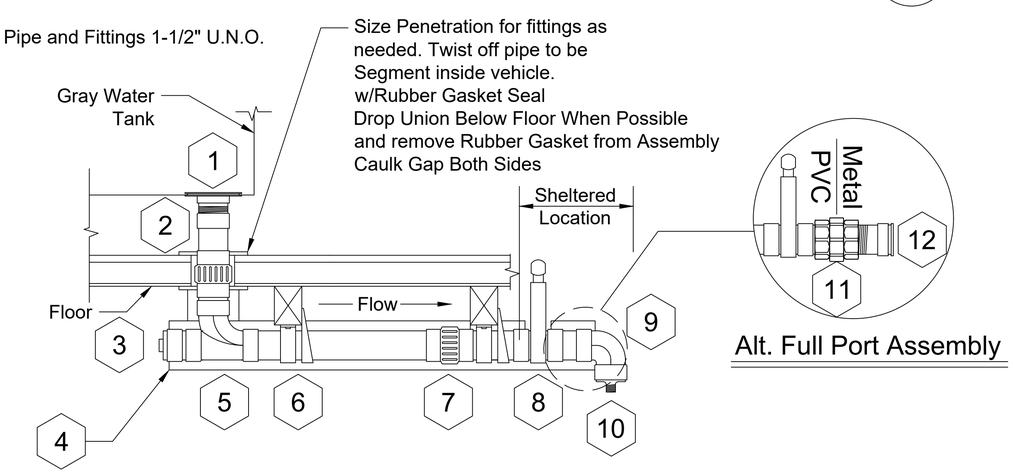

Alt. Full Port Assembly

Item #	Description	Item #	Description
1	Tank Bulkhead Fitting - Self Aligning Recommended	7	Slip on Union Socket
2	Threaded to Slip Adaptor	8	Gate Valve
3	Clean Out	9	90 Short Radius Elbow
4	1" Insulation as Req'd Secure w/Pipe Wrap Tape	10	1-1/2" to Threaded Hose Line Connection
5	1-1/2"x1-1/2"x1-1/2" Sanitary Tee	11	PVC To Metal Pipe Union*
6	Pipe Anchor or Pipe Strap	12	1-1/2" Full Port Discharge Hose*

* Alt Option As Required By Local Code

Typical Gray Water Drain Assembly (1D)

Scale: NTS (-)

KARPATIA

Designer: DRAFTING & DESIGN SERVICES

Document Identification: Coordination ☐ Submittal ☑ Shop Drawing ☐ Permit ☐ Revision ☐ Fabrication ☐

This Document and its contents are the property of Karpatia Design Services and shall not be reproduced without this sheet. Do Not Reproduce with out express written consent.

Sheet Title: Typical Plumbing Details

Owner Info: -

Revision	Description	Date
-	-	-

Scale: As-Shown | Project#: KT2021.923 | Drawn By: NJW | Plot Date: 2/2/2022 | CHK BY: NJW

Project Name: Karpatia Typical Details

Page No: FS-1.4.1

-All Pipe and Fittings 1-1/2" U.N.O.

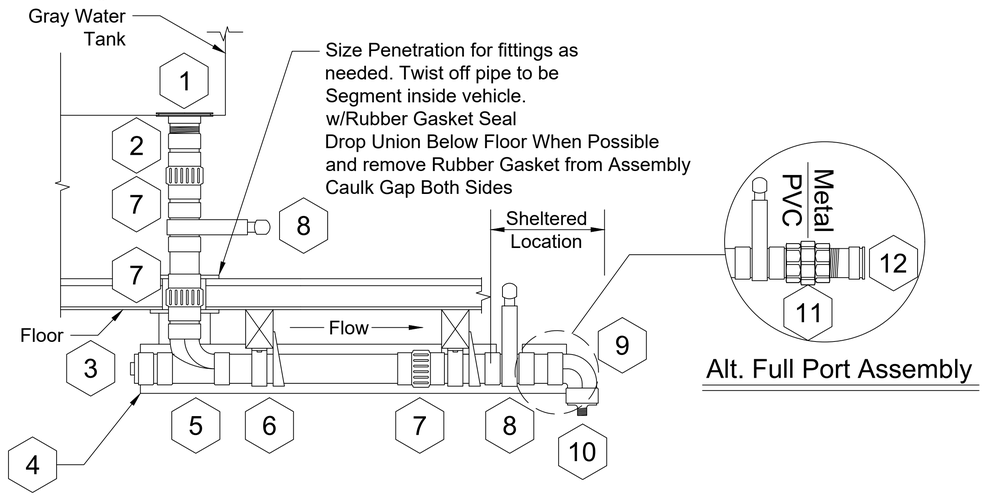

Item #	Description	Item #	Description
1	Tank Bulkhead Fitting - Self Aligning Recommended	7	Slip on Union Socket
2	Threaded to Slip Adaptor	8	Gate Valve
3	Clean Out	9	90 Short Radius Elbow
4	1" Insulation as Req'd Secure w/Pipe Wrap Tape	10	1-1/2" to Threaded Hose Line Connection
5	1-1/2"x1-1/2"x1-1/2" Sanitary Tee	11	PVC To Metal Pipe Union*
6	Pipe Anchor or Pipe Strap	12	1-1/2" Full Port Discharge Hose*

* Alt Option As Required By Local Code

Freeze Concern Gray Water Drain Assembly (1D.1)

Scale: NTS -

-All Pipe and Fittings 1-1/2" U.N.O.

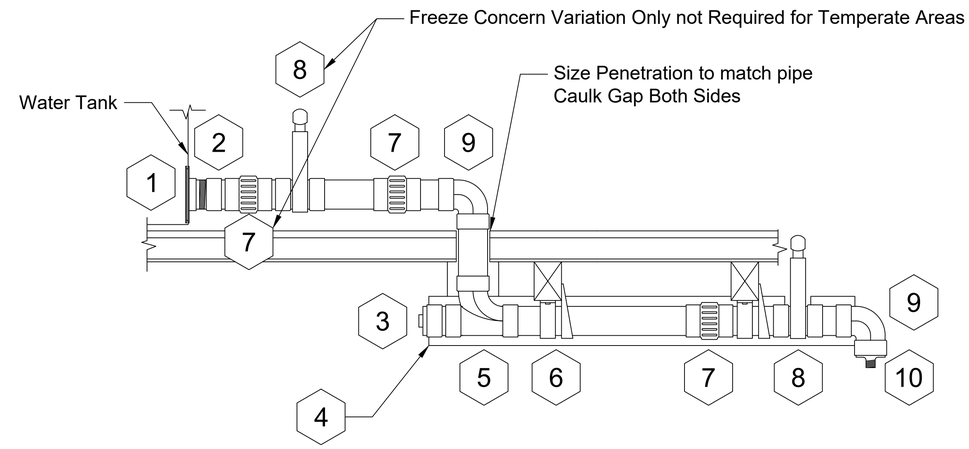

Item #	Description	Item #	Description
1	Tank Bulkhead Fitting - Self Aligning Recommended	6	Pipe Anchor or Pipe Strap
2	Threaded to Slip Adaptor	7	Slip on Union Socket
3	Clean Out	8	Gate Valve
4	1" Insulation as Req'd Secure w/Pipe Wrap Tape	9	90 Short Radius Elbow
5	1-1/2"x1-1/2"x1-1/2" Sanitary Tee	10	1-1/2" to Threaded Hose Line Connection

Pre-approval Only Gray Water Drain Assembly Detail (1D.2)

Scale: NTS -

Recommended Assembly

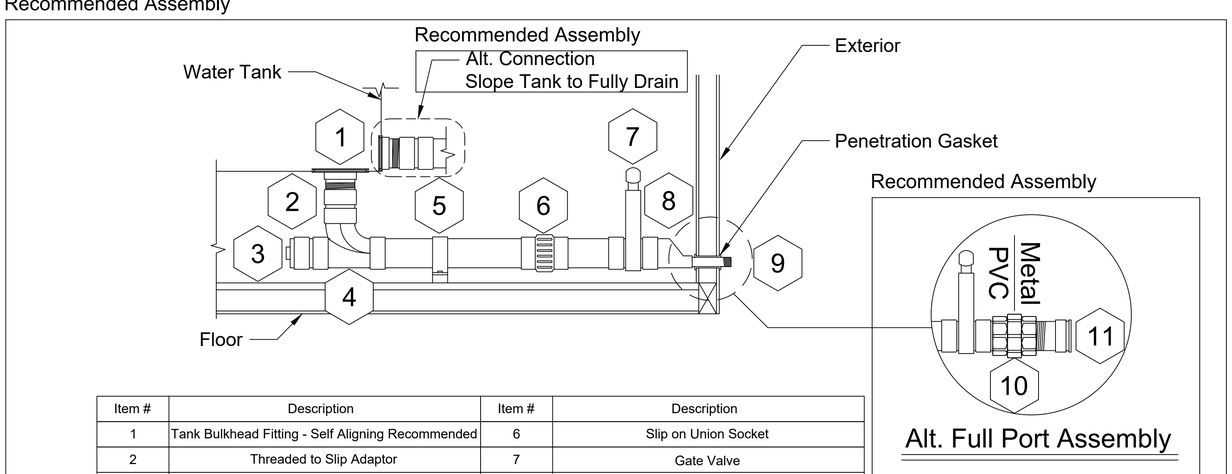

Item #	Description	Item #	Description
1	Tank Bulkhead Fitting - Self Aligning Recommended	6	Slip on Union Socket
2	Threaded to Slip Adaptor	7	Gate Valve
3	Clean Out	8	Bottom Flat Eccentric Reducer
4	1-1/2"x1-1/2"x1-1/2" Sanitary Tee	9	Threaded Hose Line Connection
5	Pipe Support	10	PVC To Metal Pipe Union*
		11	1-1/2" Full Port Discharge Hose*

Internal Gray Water Drain Assembly (1D.3)

Scale: NTS -

-All Pipe and Fittings 1-1/2" U.N.O.

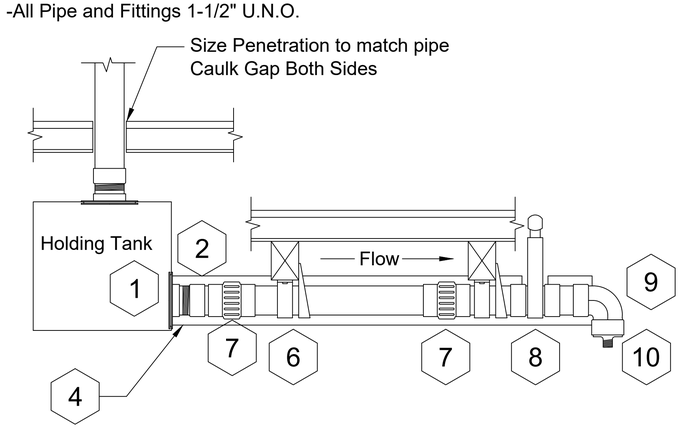

Item #	Description	Item #	Description
1	Tank Bulkhead Fitting - Self Aligning Recommended	6	Pipe Anchor or Pipe Strap
2	Threaded to Slip Adaptor	7	Slip on Union Socket
3	Not Used	8	Gate Valve
4	1" Insulation as Req'd Secure w/Pipe Wrap Tape	9	90 Short Radius Elbow
5	Not Used	10	1-1/2" to Threaded Hose Line Connection

Gray Water Drain Assembly Detail (1D.4)

Scale: NTS -

KARPATIA

Designer: DRAFTING & DESIGN SERVICES

Document Identification: Coordination ☐ Submittal ☑ Shop Drawing ☐ Permit ☐ Revision ☐ Fabrication ☐

This Document and its contents are the property of Karpatia Tiny Homes and shall not be reproduced in whole or in part without prior written consent. Do Not Reproduce with out express written consent.

Sheet Title: Alternative Plumbing Details

Owner Info: -

Revision	Description	Date	Chk BY
-	-	-	-

Scale: As-Shown | Project#: KT2021 003 | Dwn By: NJW | Plot Date: 2/2/2022 | Chk BY: NJW

Project Name: Karpatia Typical Details

Page No: FS-1.4.2

COUNTY OF SAN MATEO - PLANNING AND BUILDING DEPARTMENT

ATTACHMENT E

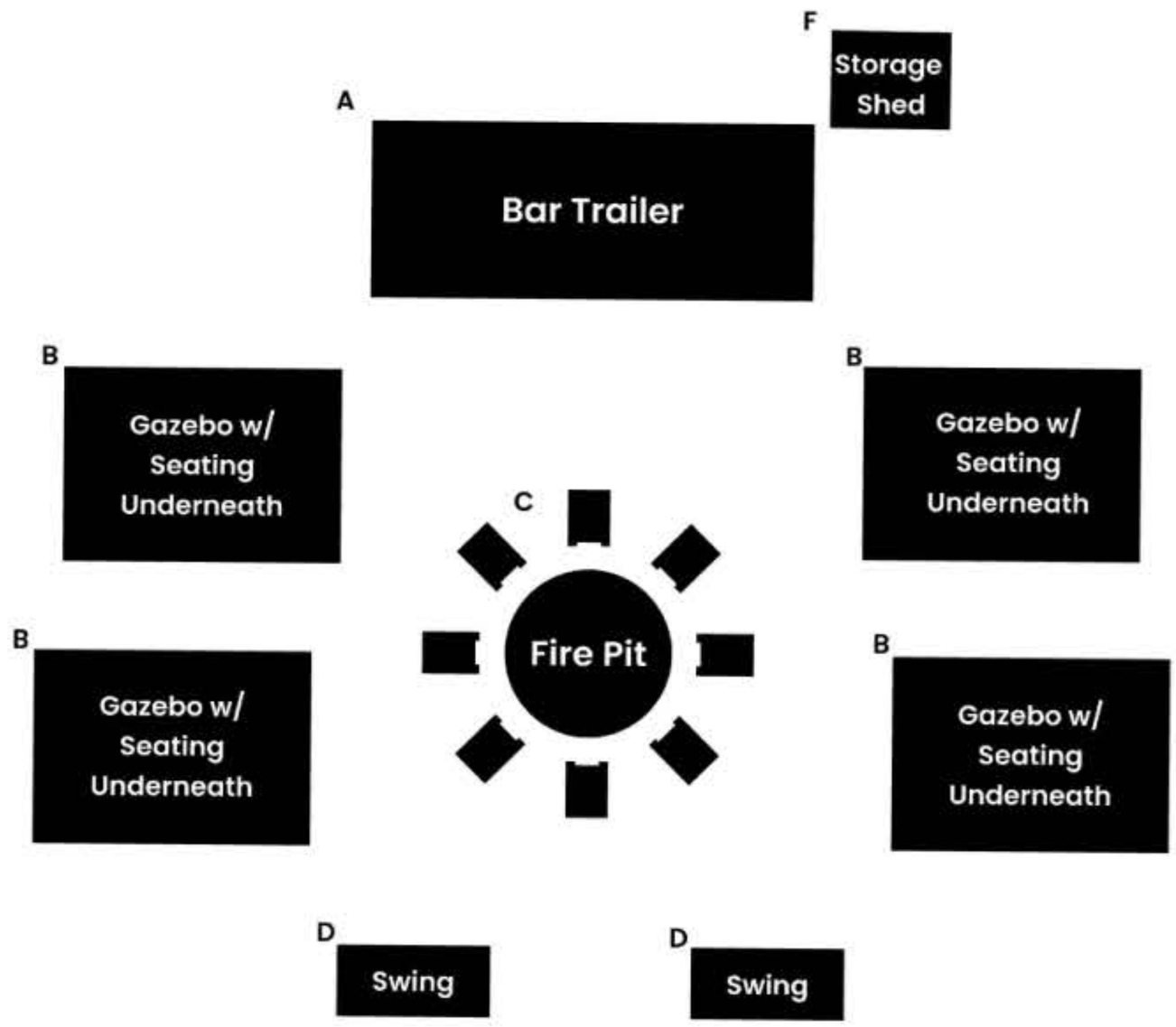

A. Customized Trailer

Concession Box Trailer 16' in length x7' tall from the ground to the top.'

Basic Black paneling w/ OceanCiders wrap on front side. (see attached trailer design for materials & full dimensions)

B. Gazebos

Overall	11' 3 13/16" W x 11' 3 13/16" D x 9' 2 5/8" H
Roof	11' 3 13/16" W x 11' 3 13/16"
Posts	6' 6 3/4" H
Overall Product Weight	80.47 lb.
Roof Hanging Weight Capacity	20 lb.

Materials	galvanized steel frame & coated oxford fabric top - beige - (waterproof, UV resistant & wear resistant) + clear vinyl sides

B. Sample of seating under Gazebos

C. Propane Fire Pit w/ 8 Adirondack Chairs

Stone Fire Ring	48 x 48 x 12 inches	Basic Fire Pit Burner & Hose
Resin Adirondack Chairs (basic brown)	Overall Measurements	37" H x 29" W x 33.5" D Weight 172lbs.

D. Free-Standing bench swing

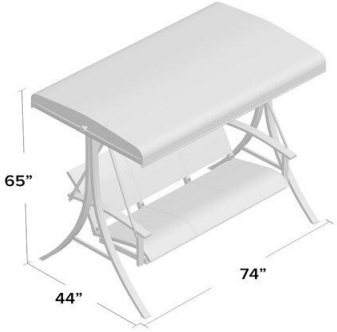

F. Storage Shed

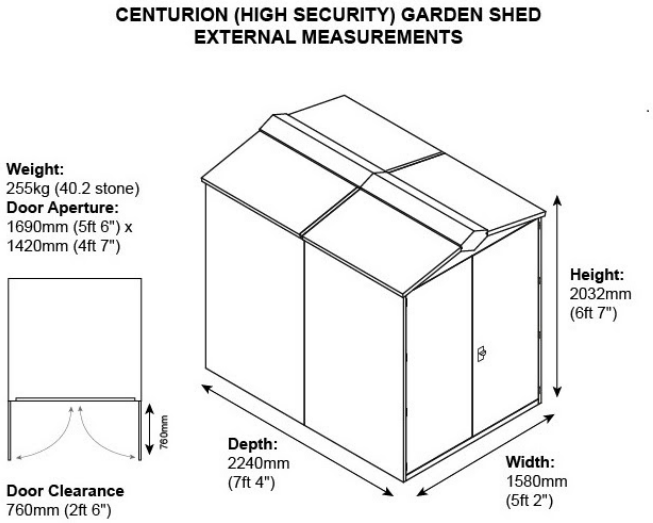

Made with dark grey galvanized steel for security.

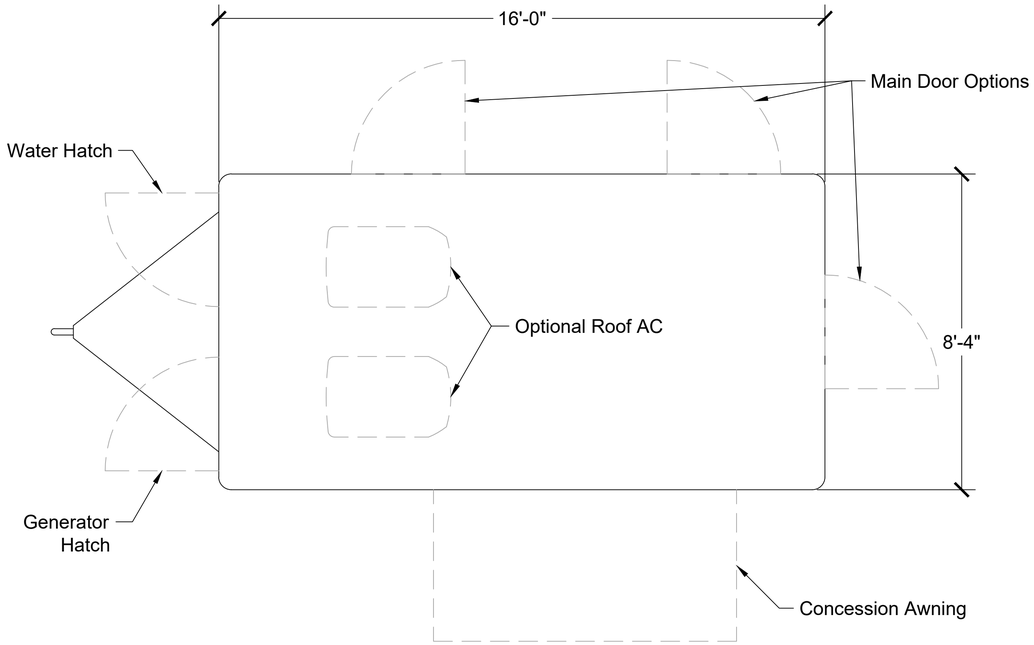

Overall Plan View 1
Scale: 1/2" = 1' - 0" -

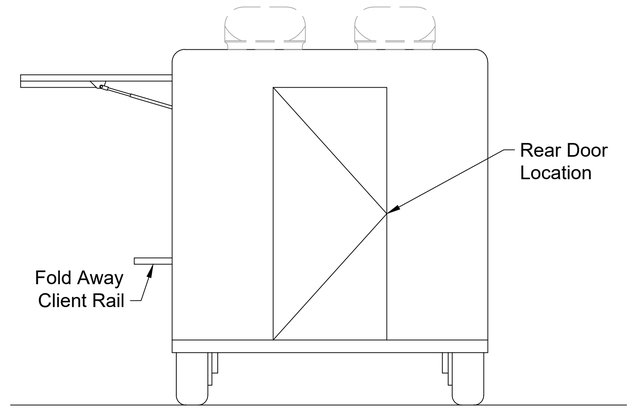

Rear of Trailer View 1
Scale: 1/2" = 1' - 0" -

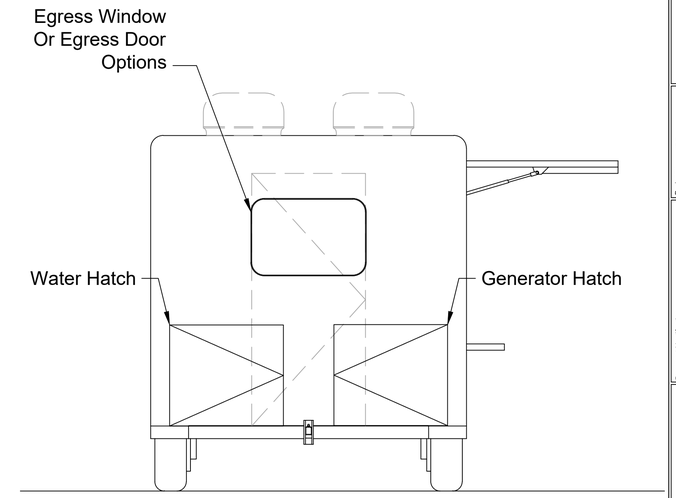

Front of Trailer View 1
Scale: 1/2" = 1' - 0" -

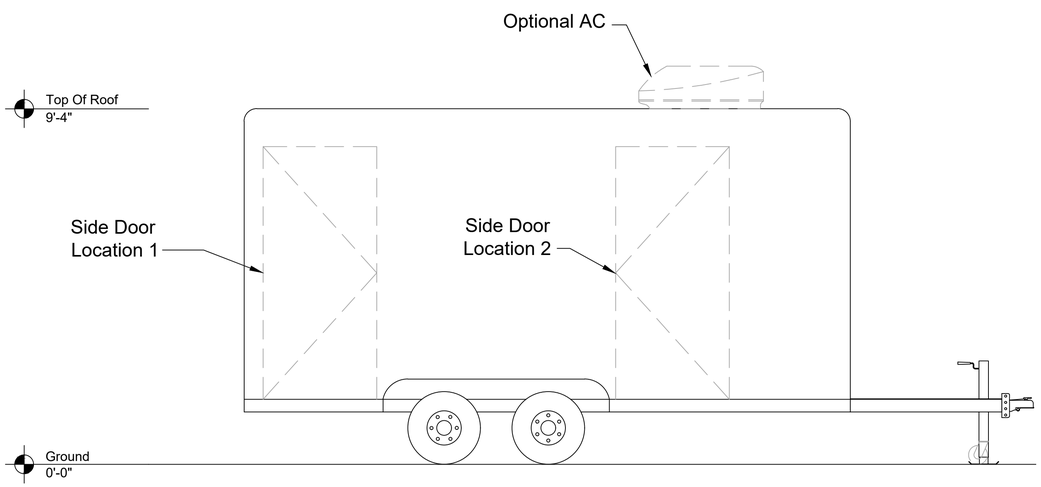

Driver Side Elevation Plan 1
Scale: 1/2" = 1' - 0" -

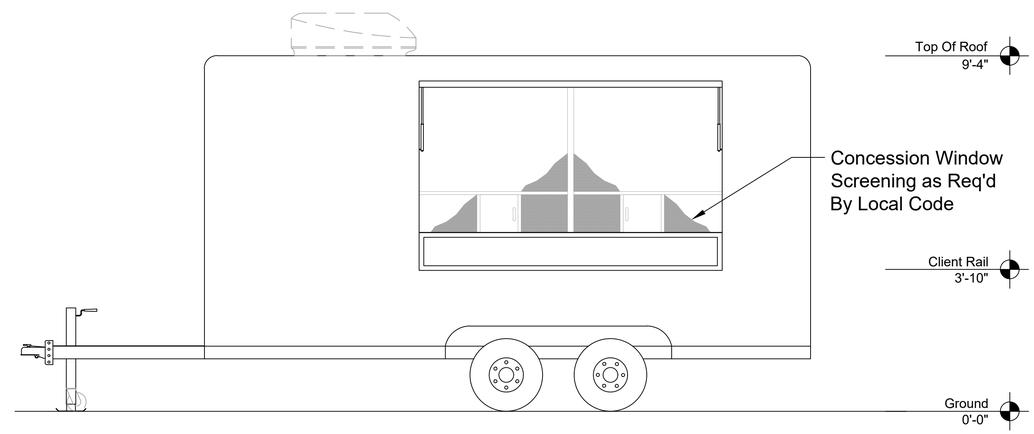

Client Side Elevation Plan 1
Scale: 1/2" = 1' - 0" -

Typical Finish Schedule

Surface	Material	Finish
Exterior Walls	Stainless Steel or Aluminum Panels	Paint, Wrap, Clear Coat, or None
Roof	Stainless Steel or Aluminum Panels	Paint, Wrap, Clear Coat, or None
Trailer Tongue	Black Iron Steel And Aluminum Plate	Painted or None
Doors/Hatches	Steel, Aluminum, Plastic Combinations	Painted or None
Concession Window	Steel, Aluminum, Plastic Combinations	Painted or None
Client Rail	Stainless Steel or Aluminum	None

KARPATIA

Designer: DRAFTING & DESIGN SERVICES

Document Identification
Coordination ☐ Submittal ☑ Shop Drawing ☐
Permit ☐ Revision ☐ Fabrication ☐

This Document and its contents are the property of Karpatia This document is loaned and must be returned on request. Do Not Reproduce with out express written consent.

Sheet Title: Basic Layout and Options Plan

Owner Info: -

Scale:	As-Shown	Project#:	N/A	Drawn By:	N/W	Plot Date:	12/1/2021	Chk BY:	N/W

Revision	Description	Date
-	-	-
-	-	-
-	-	-
-	-	-
-	-	-
-	-	-

Project Name: Box Trailer Sample

Page No: BT-0.0.1

KOHLER®

Model: 24RCLA

Multi-Fuel
Natural Gas/LPG

ISO 9001 KOHLER® NATIONALLY REGISTERED

The Kohler® Advantage

- **High Quality Power**
  Kohler home generators provide advanced voltage and frequency regulation along with ultra-low levels of harmonic distortion for excellent generator power quality to protect your valuable electronics.
- **Extraordinary Reliability**
  Kohler is known for extraordinary reliability and performance and backs that up with a premium five-year or 2000 hour limited warranty.
- **Aluminum Enclosure**
  Attractive aluminum enclosure allows installation as close as 18 inches from your home or small business.
- **Quiet Operation**
  Kohler home generators provide quiet, neighborhood-friendly performance.

Standard Features

- Kohler Co. provides one-source responsibility for the generating system and accessories.
- The generator set and its components are prototype-tested, factory-built, and production-tested.
- The generator set accepts rated load in one step.
- A standard five-year or 2000 hour limited warranty covers all systems and components.
- Quick-ship (QS) models with selected features are available. See your Kohler distributor for details.
- Meets 291 kph (181 mph) wind load rating.
- GFCI service outlet installed on the junction box.
- RDC2 Controller
  - One digital controller manages both the generator set and transfer switch functions (with optional Model RXT transfer switch).
  - Designed for today's most sophisticated electronics.
  - Electronic speed control responds quickly to varying household demand.
  - Digital voltage regulation protects your valuable electronics from harmonic distortion and unstable power quality.
  - Two-line, backlit LCD screen is easy to read in all lighting conditions, including direct sunlight and low light.
- Engine Features
  - Powerful and reliable 2.2 L liquid-cooled engine
  - Electronic engine management system.
  - Simple field conversion between natural gas and LPG fuels while maintaining emission certification.
- Innovative Cooling System
  - Electronically controlled fan speeds minimize generator set sound signature.
- Certifications
  - The 60 Hz generator set engine is certified by the Environmental Protection Agency (EPA) to conform to the New Source Performance Standard (NSPS) for stationary spark-ignited emissions.
  - cUL/UL listing, CSA certification standard are available (60 Hz only).
  - Accepted by the Massachusetts Board of Registration of Plumbers and Gas Fitters.
  - Meets NFPA 37 requirements for 18 in. offset for installation.
- Approved for stationary standby applications in locations served by a reliable utility source.

Generator Set Ratings

				Standby Ratings			
				Natural Gas		LPG	
Alternator	Voltage	Ph	Hz	kW/kVA	Amps	kW/kVA	Amps
4E5.0	120/240	1	60	21/21	88	24/24	100
4D5.0	120/240	1	60	21/21	88	21/21	88
	120/208	3	60	21/26	73	23/29	81
	127/220	3	60	21/26	69	23/29	77
	120/240	3	60	21/26	63	23/29	70
	277/480	3	60	21/26	32	23/29	35

* 50 Hz options available. Contact your Customer Service representative.

RATINGS: All three-phase units are rated at 0.8 power factor. All single-phase units are rated at 1.0 power factor. Due to manufacturing variations, the ratings tolerance is ±5%. *Standby Ratings:* Standby ratings apply to installations served by a reliable utility source. The standby rating is applicable to varying loads with an average load factor of 80% for the duration of a power outage. No overload capacity is specified for this rating. Ratings are in accordance with ISO-3046/1, BS 5514, AS 2789, and DIN 6271. GENERAL GUIDELINES FOR DERATING: *Altitude:* Derate 1.3% per 100 m (328 ft.) elevation above 200 m (656 ft.). *Temperature:* Derate 3.0% per 10°C (18°F) temperature above 25°C (77°F). Availability is subject to change without notice. The generator set manufacturer reserves the right to change the design or specifications without notice and without any obligation or liability whatsoever. Contact your local Kohler generator distributor for availability.

Alternator Specifications

Specifications	Alternator
Manufacturer	Kohler
Type	4-Pole, Rotating Field
Exciter type	Brushless, Wound-Field
Leads: quantity, type	
4E5.0	4, 120/240
4D5.0	12, Reconnectable
Voltage regulator	Solid State, Volts/Hz
Insulation:	NEMA MG1
Material	Class H
Temperature rise	130°C, Standby
Bearing: quantity, type	1, Sealed
Coupling	Flexible Disc
Voltage regulation, no-load to full-load	±1.0% Maximum
Unbalanced load capability	100% of Rated Standby Current
One-step load acceptance	100% of Rating
Peak motor starting kVA:	(35% dip for voltages below)
240 V 4E5.0 (4 lead)	37 (60 Hz)
480 V, 400 V 4D5.0 (12 lead)	59 (60 Hz) 44 (50 Hz)

- NEMA MG1, IEEE, and ANSI standards compliance for temperature rise and motor starting.
- Sustained short- circuit current of up to 300% of the rated current for up to 10 seconds.
- Sustained short-circuit current enabling downstream circuit breakers to trip without collapsing the alternator field.
- Self-ventilated and drip-proof construction.
- Windings are vacuum-impregnated with epoxy varnish for dependability and long life.
- Superior voltage waveform from a two-thirds pitch stator and skewed rotor.
- Total harmonic distortion (THD) from no load to full load with a linear load is less than 5%.

Application Data

Engine

Engine Specifications	60 Hz	50 Hz
Manufacturer	Kohler	
Engine: model, type	Residential Powertrain KG2204, 2.2 L, 4-Cycle Natural Aspiration	
Cylinder arrangement	In-line 4	
Displacement, L (cu. in.)	2.2 (134.25)	
Bore and stroke, mm (in.)	91 x 86 (3.5 x 3.4)	
Compression ratio	10.5:1	
Piston speed, m/min. (ft./min.)	310 (1016)	258 (847)
Main bearings: quantity, type	5, plain alloy steel	
Rated rpm	1800	1500
Max. power at rated rpm, kW (HP)		
LPG	30 (40)	NA
Natural Gas	27 (36)	NA
Cylinder head material	Cast Iron	
Piston type and material	High Silicon Aluminum	
Crankshaft material	Nodular Iron	
Valve (exhaust) material	Forged Steel	
Governor type	Electronic	
Frequency regulation, no-load to full-load	Isochronous	
Frequency regulation, steady state	±1.0%	
Frequency	Fixed	
Air cleaner type	Dry	

Engine Electrical

Engine Electrical System	
Ignition system	Electronic
Battery charging alternator:	
Ground (negative/positive)	Negative
Volts (DC)	14
Ampere rating	90
Starter motor rated voltage (DC)	12
Battery, recommended rating for - 18°C (0°F):	
Qty., cold cranking amps (CCA)	One, 630
Battery voltage (DC)	12
Battery group size	24

Exhaust

Exhaust System	60 Hz	50 Hz
Exhaust manifold type	Dry	
Exhaust temperature at rated kW, dry exhaust, °C (°F)	633 (1171)	
Maximum allowable back pressure, kPa (in. Hg)	7.5 (2.2)	

Fuel

Fuel System		
Fuel type	Natural Gas or LPG	
Fuel supply line inlet	1 in. NPT	
Natural gas fuel supply pressure, kPa (in. H_2O)	1.2- 2.7 (5-11)	
LPG vapor withdrawal fuel supply pressure, kPa (in. H_2O)	1.2- 2.7 (5-11)	
Fuel Composition Limits *	**Nat. Gas**	**LP Gas**
Methane, % by volume	90 min.	—
Ethane, % by volume	4.0 max.	—
Propane, % by volume	1.0 max.	85 min.
Propene, % by volume	0.1 max.	5.0 max.
C_4 and higher, % by volume	0.3 max.	2.5 max.
Sulfur, ppm mass	25 max.	
Lower heating value, MJ/m^3 (Btu/ft^3), min.	33.2 (890)	84.2 (2260)

* Fuels with other compositions may be acceptable. If your fuel is outside the listed specifications, contact your local distributor for further analysis and advice.

Lubrication

Lubricating System	
Type	Full Pressure
Oil pan capacity, L (qt.) §	4.2 (4.4)
Oil added during oil change (on average), L (qt.) §	3.3 (3.5)
Oil filter: quantity, type §	1, Cartridge

§ Kohler recommends the use of Kohler Genuine oil and filters.

Application Data

Cooling

Radiator System	60 Hz	50 Hz
Ambient temperature, °C (°F)	45 (113)	
Engine jacket water capacity, L (gal.)	2.65 (0.7)	
Radiator system capacity, including engine, L (gal.)	13.2 (3.5)	
Water pump type	Centrifugal	
Fan diameter, mm (in.)	qty. 3 @ 406 (16)	
Fan power requirements (powered by engine battery charging alternator)	12VDC, 18 amps each	

Operation Requirements

Air Requirements	60 Hz	50 Hz
Radiator-cooled cooling air, m^3/min. (scfm)†	51 (1800)	51 (1800)
Combustion air, m^3/min. (cfm)	1.4 (49)	1.2 (42)
Air over engine, m^3/min. (cfm)	25 (900)	25 (900)

† Air density = 1.20 kg/m^3 (0.075 lbm/ft^3)

Fuel Consumption‡

Natural Gas, m^3/hr. (cfh) at % load	60 Hz	50 Hz
100%	8.5 (301)	7.8 (275)
75%	6.3 (223)	6.4 (225)
50%	5.6 (199)	5.4 (192)
25%	4.0 (140)	3.3 (116)
Exercise	2.8 (97)	2.9 (103)

LP Gas, m^3/hr. (cfh) at % load	60 Hz	50 Hz
100%	3.2 (113)	2.7 (96)
75%	2.8 (97)	2.3 (81)
50%	2.4 (84)	2.0 (72)
25%	1.8 (63)	1.7 (60)
Exercise	1.4 (51)	1.4 (48)

‡ Nominal Fuel Rating: Natural gas, 37 MJ/m^3 (1000 Btu/ft^3)
LP Vapor, 93 MJ/m^3 (2500 Btu/ft^3)

LP vapor conversion factors:
8.58 $ft.^3$ = 1 lb.
0.535 m^3 = 1 kg.
36.39 $ft.^3$ = 1 gal.

Sound Enclosure Features

- Sound-attenuating enclosure uses acoustic insulation that meets UL 94 HF1 flammability classification and repels moisture absorption.
- Internally mounted critical silencer.
- Skid-mounted, aluminum construction with two removable access panels.
- Fade-, scratch-, and corrosion-resistant Kohler® cashmere powder-baked finish.

Sound Data

Model 24RCLA 8 point logarithmic average sound levels are 53 dB(A) during weekly engine exercise and 61 dB(A) during full-speed generator diagnostics and normal operation. For comparison to competitor ratings, the lowest point sound levels are 52 dB(A) and 59 dB(A) respectively.*

All sound levels are measured at 7 meters with no load.

* Lowest of 8 points measured around the generator. Sound levels at other points around generator may vary depending on installation parameters.

RDC2 Controller

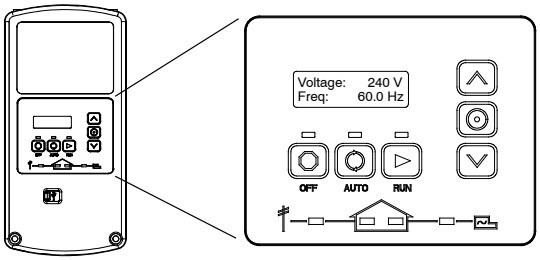

The RDC2 controller provides integrated control for the generator set, Kohler® Model RXT transfer switch, programmable interface module (PIM), and load management.

The RDC2 controller's 2-line LCD screen displays status messages and system settings that are clear and easy to read, even in direct sunlight or low light.

RDC2 Controller Features

- Membrane keypad
  - OFF, AUTO, and RUN push buttons
  - Select and arrow buttons for access to system configuration and adjustment menus
- LED indicators for OFF, AUTO, and RUN modes
- LED indicators for utility power and generator set source availability and ATS position (Model RXT transfer switch required)
- LCD screen
  - Two lines x 16 characters per line
  - Backlit display with adjustable contrast for excellent visibility in all lighting conditions
- Scrolling system status display
  - Generator set status
  - Voltage and frequency
  - Engine temperature
  - Oil pressure
  - Battery voltage
  - Engine runtime hours
- Date and time displays
- Smart engine cooldown senses engine temperature
- Digital isochronous governor to maintain steady-state speed at all loads
- Digital voltage regulation: ±1.0% RMS no-load to full-load
- Automatic start with programmed cranking cycle
- Programmable exerciser can be set to start automatically on any future day and time, and to run every week or every two weeks
- Exercise modes
  - Unloaded exercise with complete system diagnostics
  - Unloaded full-speed exercise
  - Loaded full-speed exercise (Model RXT ATS required)
- Front-access mini USB connector for SiteTech™ connection
- Integral Ethernet connector for Kohler® OnCue® Plus
- Built-in 2.5 amp battery charger
- Remote two-wire start/stop capability for optional connection of a Model RDT transfer switch

See additional controller features on the next page.

KOHLER CO., Kohler, Wisconsin 53044 USA
Phone 920-457-4441, Fax 920-459-1646
For the nearest sales and service outlet in the US and Canada, phone 1-800-544-2444
KOHLERPower.com

Additional RDC2 Controller Features

- Diagnostic messages
  - Displays diagnostic messages for the engine, generator, Model RXT transfer switch, programmable interface module (PIM), and load management device
  - Over 70 diagnostic messages can be displayed
- Maintenance reminders
- System settings
  - System voltage, frequency, and phase
  - Voltage adjustment
  - Measurement system, English or metric
- ATS status (Model RXT ATS required)
  - Source availability
  - ATS position (normal/utility or emergency/generator)
  - Source voltage and frequency
- ATS control (Model RXT ATS required)
  - Source voltage and frequency settings
  - Engine start time delay
  - Transfer time delays
  - Fixed pickup and dropout settings
  - Voltage calibration
- Programmable interface module (PIM) status displays
  - Input status (active/inactive)
  - Output status (active/inactive)
- Load control menus
  - Load status
  - Test function

Generator Set Standard Features

- Aluminum sound enclosure with enclosed silencer
- Battery rack and cables
- cUL/US listed, CSA certified
- Electronic, isochronous governor
- Flexible fuel line
- Gas fuel system (includes fuel mixer, electronic secondary gas regulator, two gas solenoid valves, and flexible fuel line between the engine and the skid-mounted fuel system components)
- GFCI service outlet, 120/240 V for customer connection
- Integral vibration isolation
- Line circuit breaker
- NEC prime mover shutdown switch
- Oil drain extension
- OnCue® Plus Generator Management System
- Operation and installation literature
- RDC2 controller with built-in battery charger
- Standard five-year or 2000 hour limited warranty

Available Options

Controller Accessories

- ❑ Lockable Emergency Stop (lockout/tagout)
- ❑ Programmable Interface Module (PIM) (provides 2 digital inputs and 6 relay outputs)

Electrical System

- ❑ Battery
- ❑ Battery Heater
- ❑ OnCue® Plus Wireless Radio Kit

Available Options, Continued

Starting Aids §

- ❑ Block Heater, 120 V, 1 Ph
- ❑ Block Heater, 240 V, 1 Ph
- ❑ Oil Pan Heater, 120 V, 1 Ph
- ❑ Oil Pan Heater, 240 V, 1 Ph

§ One block heater or oil pan heater is recommended for ambient temperatures below 0°C (32°F). At temperatures below -18°C (0°F), installation of both heaters is recommended.

Automatic Transfer Switches and Accessories

- ❑ Model RDT Automatic Transfer Switch
- ❑ Model RXT Automatic Transfer Switch
- ❑ Model RXT Automatic Transfer Switch with Combined Interface/Load Management Board
- ❑ Load Shed Kit for RDT or RXT
- ❑ Power Relay Modules (use up to 4 relay modules for each load management device)

Maintenance

- ❑ Maintenance kit (includes air filter, oil, oil filter, and spark plugs)

Miscellaneous

- ❑ Rated Power Factor Testing

Literature

- ❑ General Maintenance Literature Kit
- ❑ Overhaul Literature Kit
- ❑ Production Literature Kit

Warranty

- ❑ Extended 5-Year/2000 Hour Comprehensive Limited Warranty
- ❑ Extended 10-Year/2000 Hour Comprehensive Limited Warranty

Dimensions and Weights

Overall Size, L x W x H, mm (in.):	1880 x 836 x 1169 (74 x 32.9 x 46.0)
Shipping Weight, wet, kg (lb.):	572 (1260)

Weight includes generator set with engine fluids, sound enclosure, silencer, and packaging.

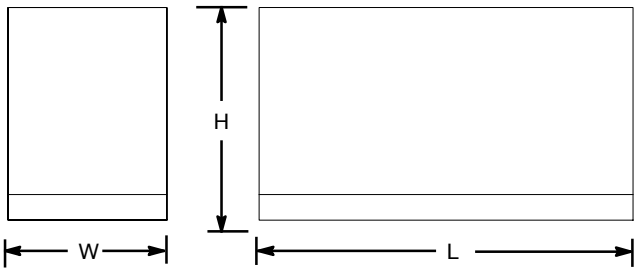

NOTE: This drawing is provided for reference only and should not be used for planning installation. Contact your local distributor for more detailed information.

DISTRIBUTED BY:

© 2021 Kohler Co. All rights reserved.

COUNTY OF SAN MATEO - PLANNING AND BUILDING DEPARTMENT

ATTACHMENT F

Board of Harbor Commissioners

Nancy Reyering, President
William Zemke, Vice President/Secretary
Tom Mattusch, Treasurer
Virginia Chang Kiraly, Commissioner
Edmundo Larenas, Commissioner

James B. Pruett, General Manager
Trisha Ortiz, District Counsel

November 21, 2022

To Whom it may Concern: PLN2021-00470

Re: OceanCiders Business Interest in Harbor District of San Mateo County Perch Beach Land

The San Mateo County Harbor District is aware that Meredith Kasyan (Applicant) of the business OceanCiders has been advised of the need to file applications where she will need a Landlord's Concurrence letter prior to a new lease negotiation for the Perch Beach location. The Applicant has begun the Commercial Activity Permit (CAP) application process with the District in order to conduct said business at the address informally assigned: 2 Pillar Point Harbor, Half Moon Bay, CA. (APN# 047-39-0020)

This letter is intended to confirm that the San Mateo County Harbor District is aware of the Applicant's application for the new Perch Beach location. Once all required documentation is received by the District, staff will proceed in processing the CAP application including presenting to the Harbor Board of Commissioners at the December 21st, 2022, Board meeting for review. Until approved by the Harbor Commission, no Commercial Activity Permit is valid for the location/business in question.

Please contact me with any questions or concerns, James Pruett, General Manager, Harbor District of San Mateo County (650) 822-4144.

Sincerely,

James B. Pruett
General Manager

504 Avenue Alhambra, Ste. 200, P.O. Box 1449, El Granada, CA 94018
(650) 583-4400 T F (650) 583-4614

Board of Harbor Commissioners

William Zemke, President
Tom Mattusch, Vice President
George Domurat, Secretary
Kathryn Slater-Carter, Treasurer
Virginia Chang Kiraly, Commissioner

James B. Pruett, General Manager
Trisha Ortiz, District Counsel

January 25, 2023

County of San Mateo
Planning and Building Department
ATTN: Summer Burlison
400 County Center
Redwood City, CA 94063

RE: Waiver of Requirement to Connect to Sewer Line- OceanCider, LLC.

Summer Burlison

This is a letter of support for OceanCider, LLC. The District supports a waiver of the to connect sewage to a trailer that does not produce any sewage. As you know, the facility will operate out of a mobile trailer and will be located above Perch Beach in Pillar Pont Harbor.

The support for the waiver is based on the following reasons:

1. The trailer will only have one sink, no restroom or dishwasher,
2. The single sink will be used mainly for handwashing and rinsing out bar top rags/sponges,
3. No dishes will be washed in the sink,
4. An estimated one(1) and two (2) gallons a day may be produced by the sink,
5. Regulations allow for a tank to be installed in the trailer to store wastewater,
6. The graywater tank can be emptied on a regular basis based on the size of the tank,
7. The installation of another sewer lateral is not desired by the District based on the California Waterboard and the Total Maximum Daily Limit (TMDL) program the District is currently operating under,
8. Requiring a business owner to outlay an additional $25,000 for a sewage connection for one (1) to two (2) gallons of graywater is excessive, especially when there is a logical and sufficient alternative.

The Harbor District fully supports OceanCider's effort in establishing a business within Pillar Point Harbor. Waiving the requirement for a sewage connection will greatly enhance OceanCiders ability to open its doors.

Regards,

James B. Pruett
General Manager

504 Avenue Alhambra, Ste. 200, P.O. Box 1449, El Granada, CA 94018
(650) 583-4400 T F (650) 583-4614

Board of Harbor Commissioners

William Zemke, President
Tom Mattusch, Vice President
George Domurat, Secretary
Kathryn Slater-Carter, Treasurer
Virginia Chang Kiraly, Commissioner

James B. Pruett, General Manager
Trisha Ortiz, District Counsel

January 25, 2023

County of San Mateo
Planning and Building Department
ATTN: Summer Burlison
400 County Center
Redwood City, CA 94063

RE: Use of Existing Restrooms- OceanCider, LLC.

Summer Burlison

OceanCider, LLC., has approached the Harbor District requesting authorization to use the public restrooms at Pillar Point Harbor for their patrons and employees.

The Harbor District consents to the use of the public restrooms at Pillar Point Harbor by both OceanCider patrons and employees.

Regards,

James B. Pruett
General Manager

504 Avenue Alhambra, Ste. 200, P.O. Box 1449, El Granada, CA 94018
(650) 583-4400 T F (650) 583-4614

COUNTY OF SAN MATEO - PLANNING AND BUILDING DEPARTMENT

ATTACHMENT G

Midcoast Community Council

An elected Advisory Council to the San Mateo County Board of Supervisors
representing Montara, Moss Beach, El Granada, Princeton, and Miramar
PO Box 248, Moss Beach, CA 94038-0248 | midcoastcommunitycouncil.org

Gregg Dieguez | Claire Toutant | Dan Haggerty | Scott Bollinger | Gus Mattammal
Chair Vice-Chair Treasurer Secretary

Date: January 25, 2023
To: James Pruett, Harbor District; Summer Burlison, Planning Department
From: Midcoast Community Council
Subject: OceanCiders permits at new Harbor location

We write this letter in support of the OceanCiders planned opening at the Pillar Point Harbor. The MCC (primarily ex-councilperson Dave Olson) has been aware of this project and its owner, Meredith Kaysan since its days as SeaCiders in early 2022, attempting to help with permitting issues with the Planning and Health Departments.

We support this low impact business for community members and visitors. Based in a trailer as it is, and using low impact cups, it's an ideal business for the Coastside. The ADA improvements for the trail connecting to the coastal trail are an additional public benefit.

The MCC supports Oceanciders, similar to our support for the Half Moon Bay Distillery with their parking issues, and the support we gave Hop Dogma with the ABC, back in 2013. All are good instances of low impact, locally owned business.

s/Gregg Dieguez, Chair

From: CLAIRE TOUTANT
To: Summer Burlison; MCC
Subject: MCC Comments on PLN2022-00383
Date: Sunday, February 26, 2023 6:47:38 PM

CAUTION: This email originated from outside of San Mateo County. Unless you recognize the sender's email address and know the content is safe, do not click links, open attachments or reply.

You have received the letter sent by the council on this project for an outdoor beverage establishment earlier in this year, prior to our receiving the formal referral.
While the letter correctly reflects the positive feelings the Council and meeting attendees had about the relaxing ambience of the proposed establishment, there are additional thoughts.
First, this will be an additional business on the Perch Beach portion of Harbor Property. Both are totally portable and do not involve significant permanent infrastructure. We think that the presence of these businesses should not be construed as allowing more substantial development on this property in the future.
Also, part of this proposed project involves substantial work on access to the site and adjoining trails, apparently at the expense of the applicant. These improvements seem to be to the ongoing benefit of the Harbor. It seems potentially problematic for a potential tenant of a public property to be responsible for improving public infrastructure adjacent to the parcel they are proposing to rent. Perhaps the interests and obligations of all parties in this could be clarified.
Further, the fact that this project involves the serving and storage of alcohol presents other issues, particularly regarding security of the non-hardened site during non-operating hours.
It is noted that there has been a proliferation of alcohol-related businesses at the Harbor and it may be worth a new look at preserving a balance aimed at family recreation and safe working harbor conditions.
Lastly, the issue of a sewer connection was raised. It is not clear to us whether the business should have a sewer connection, but sewer function is an important issue, especially in regard to Harbor businesses, and we would urge that the relationship of this project to the sewer system should be carefully considered before permitting.

--
Claire Toutant
Vice Chair, Midcoast Community Council
midcoastcommunitycouncil.org